EPSRC Centre for innovative manufacturing in ultra precision

# Design and Control of a Compact Ultra-Precision Machine for High Dynamic Performance




Cranfield UNIVERSITY EPSRC Pioneering research and skills UNIVERSITY OF CAMBRIDGE

# Why High-Dynamic Performance?

EPSRC Centre for innovative manufacturing in ultra precision

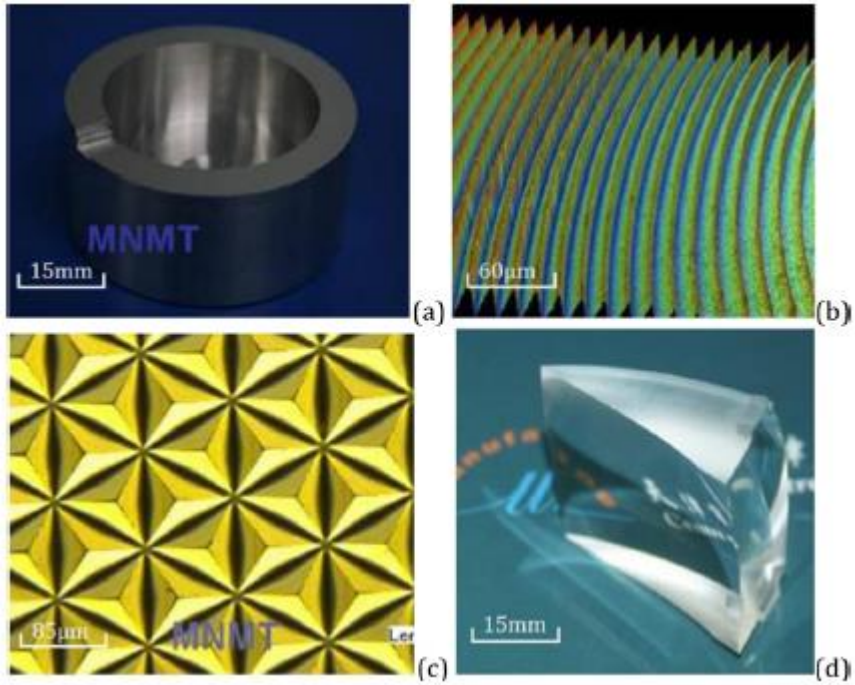


Ref: Fang et al., 2013

# What is a compact UP machine?
# µ4 machine

EPSRC Centre for innovative manufacturing in ultra precision

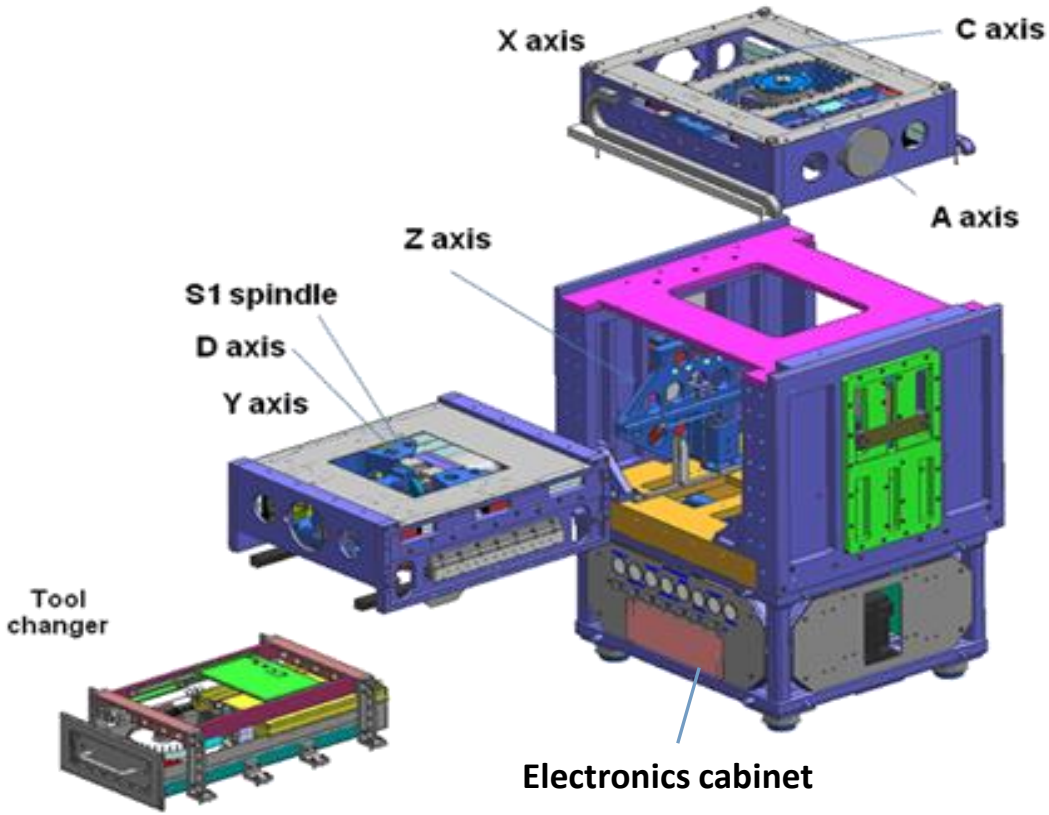



Cranfield UNIVERSITY EPSRC Pioneering research and skills UNIVERSITY OF CAMBRIDGE

# What is the "problem"?
# "stiff frame"

EPSRC Centre for innovative manufacturing in ultra precision

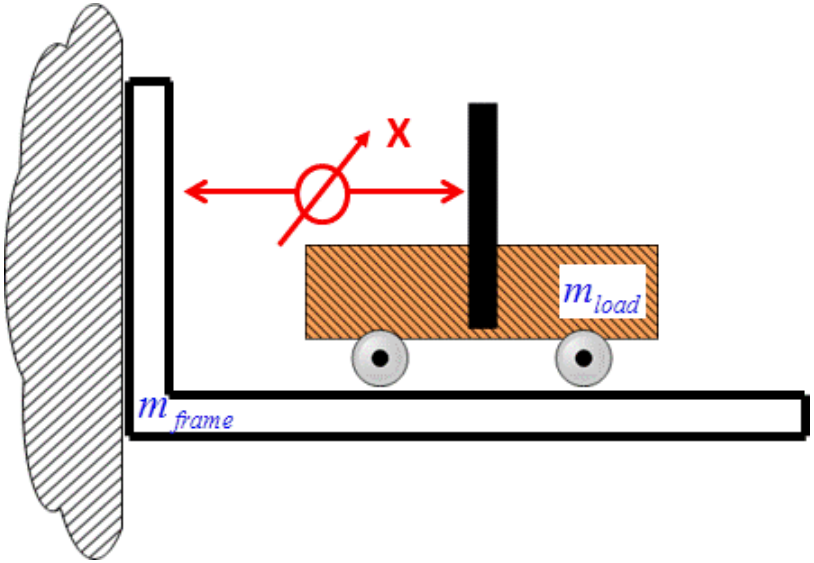


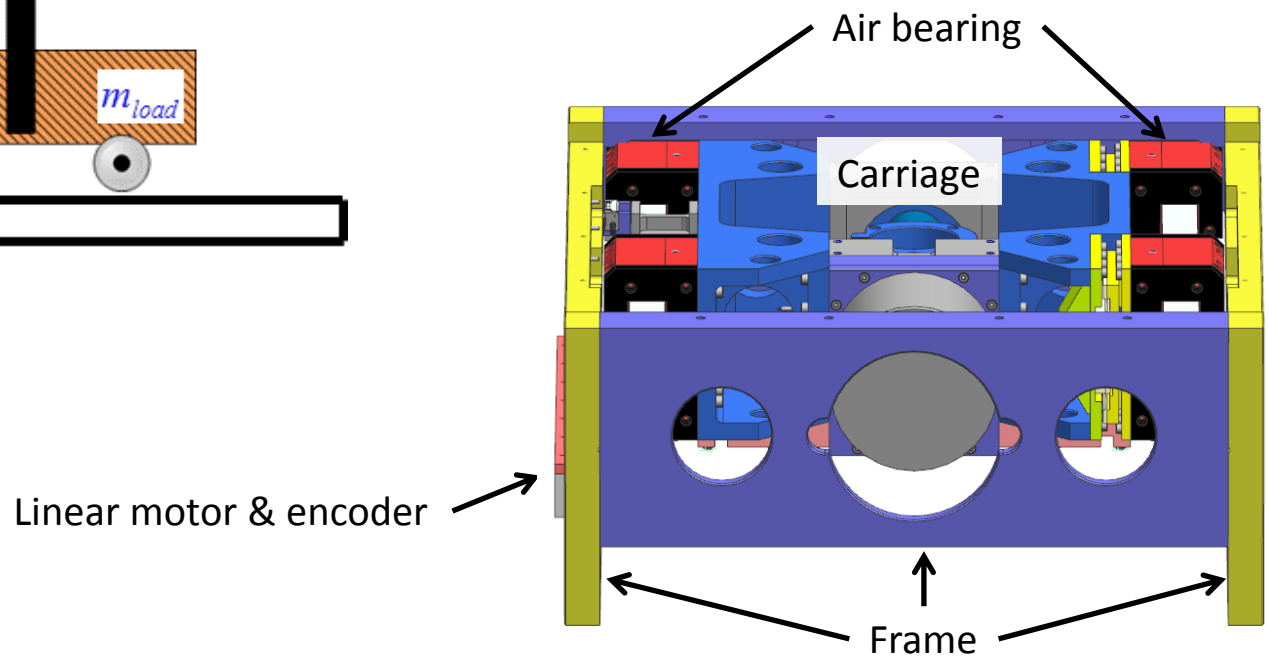

# What is the "problem"?
# "flexible frame"

EPSRC Centre for innovative manufacturing in ultra precision

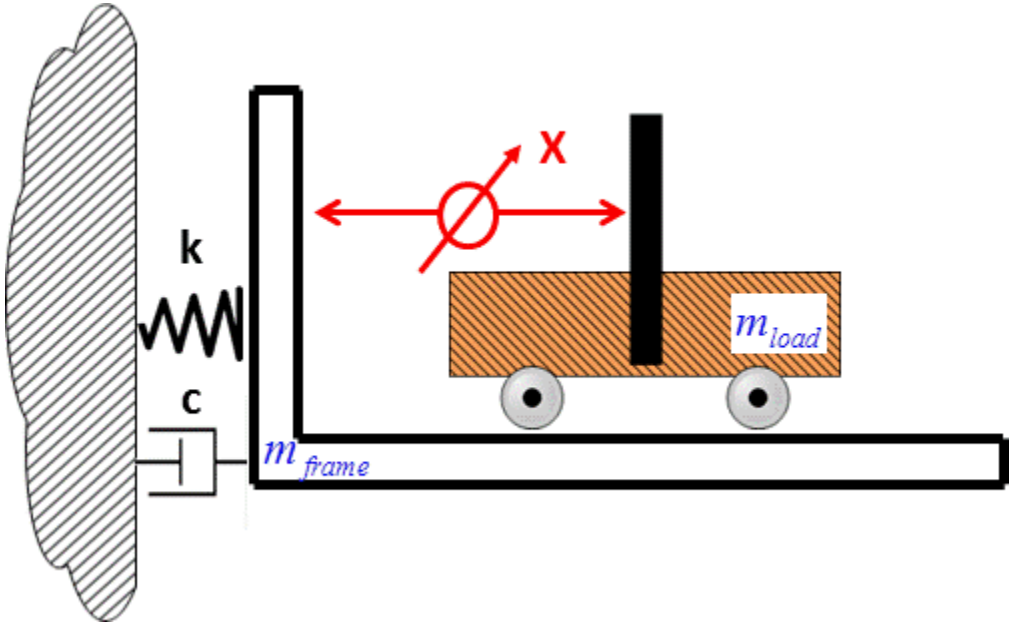


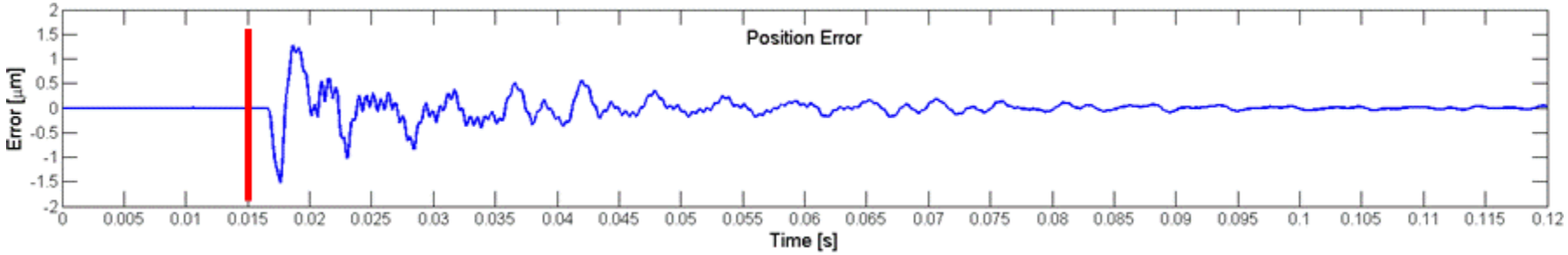


Cranfield UNIVERSITY EPSRC Pioneering research and skills UNIVERSITY OF CAMBRIDGE

# What is the research hypothesis?

EPSRC Centre for innovative manufacturing in ultra precision

***Improving position control of a linear stage based on real time measurements from array of accelerometers***

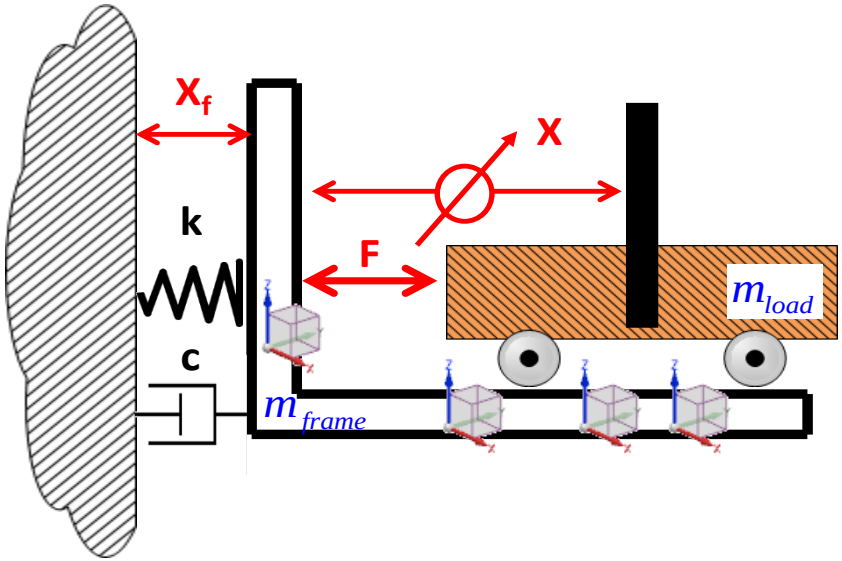


Cranfield UNIVERSITY EPSRC Pioneering research and skills UNIVERSITY OF CAMBRIDGE

# What are the aims & objectives?

EPSRC Centre for innovative manufacturing in ultra precision


***Capabilities:***

- ***sub-micrometre accuracy***
- ***high jerk (>500m/s$^3$)***

***Aims:***

- ***Machine modelling***
- ***Technological solutions for improving control for "flexible frame"***

Cranfield UNIVERSITY EPSRC Pioneering research and skills UNIVERSITY OF CAMBRIDGE

# What is the contribution?

EPSRC Centre for innovative manufacturing in ultra precision

***combining the apparent antagonistic requirements of a compact machine and high dynamic performance into one solution***

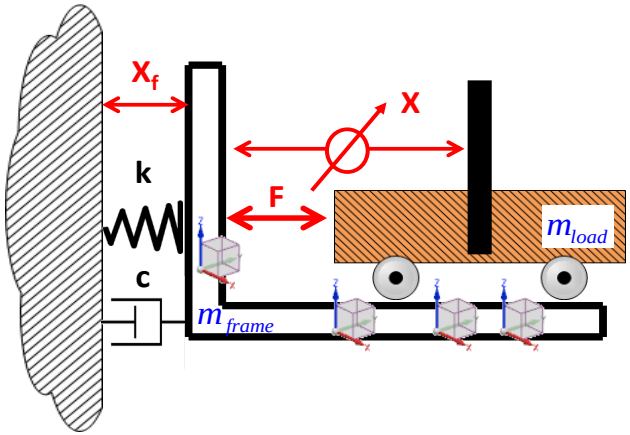


Cranfield UNIVERSITY EPSRC Pioneering research and skills UNIVERSITY OF CAMBRIDGE

# What is the methodology?

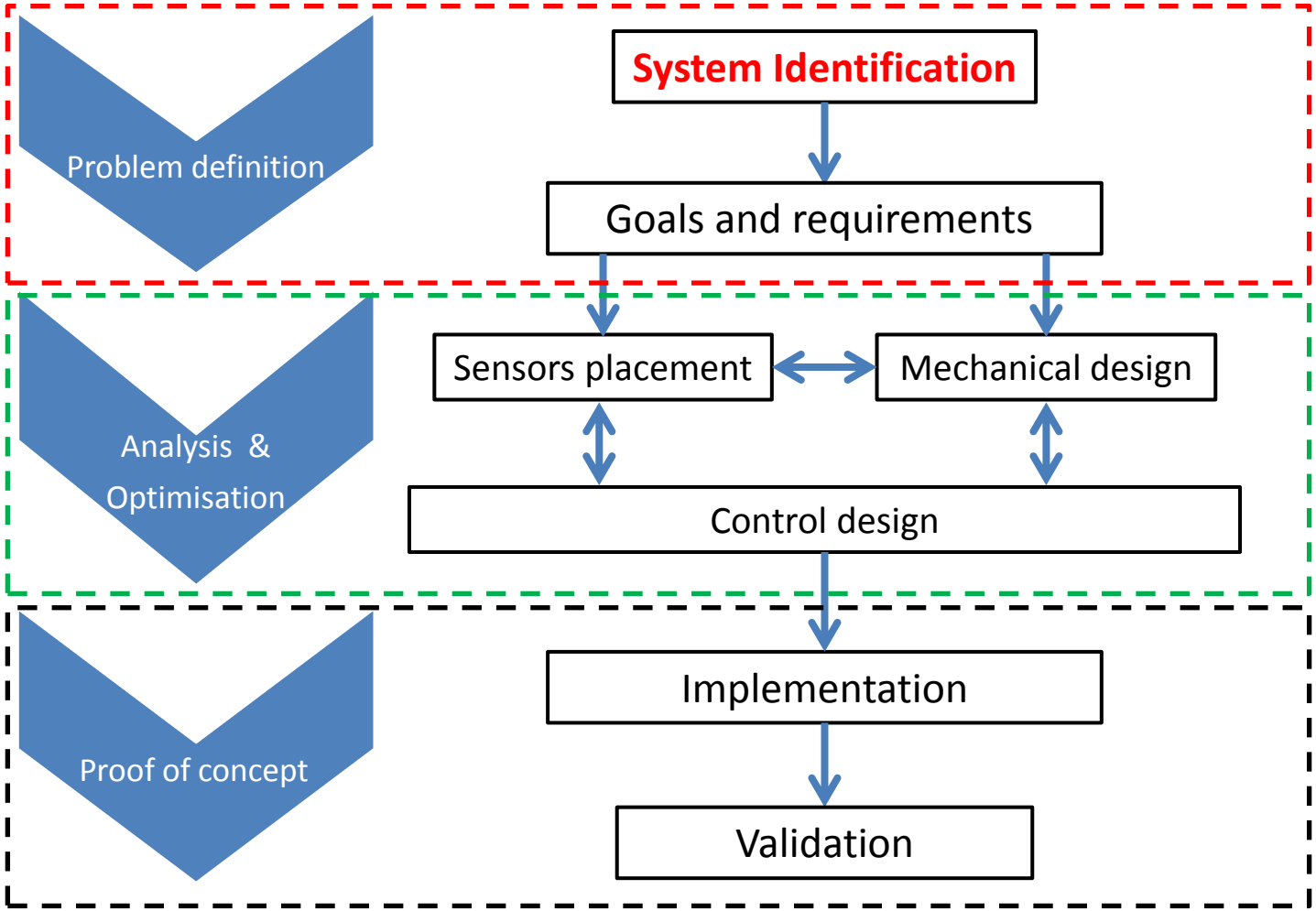

# What is the setup?

EPSRC Centre for innovative manufacturing in ultra precision

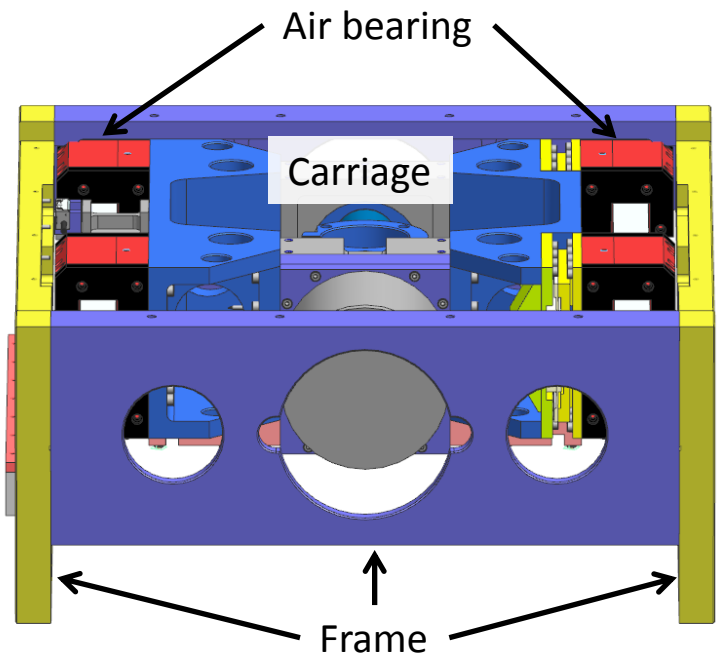


**CAD**

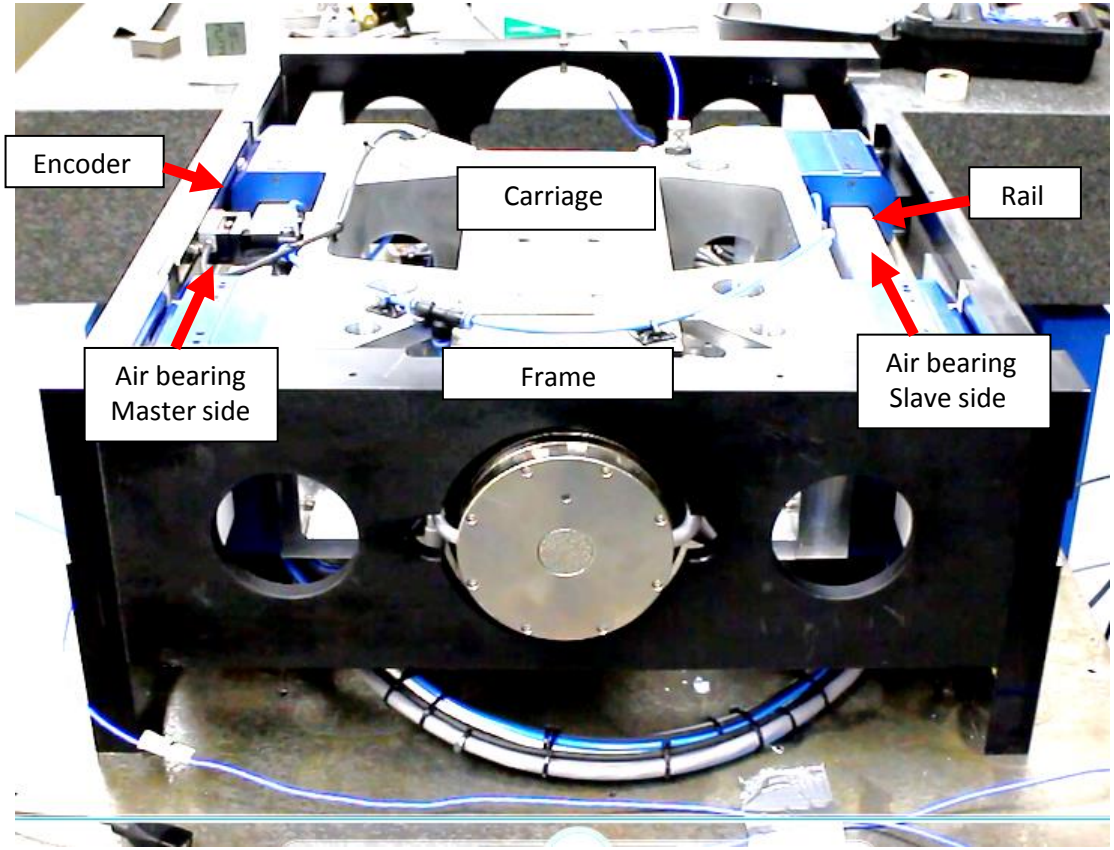


**Test rig**

Cranfield UNIVERSITY EPSRC Pioneering research and skills UNIVERSITY OF CAMBRIDGE

# System identification: methodology

EPSRC Centre for innovative manufacturing in ultra precision

Plate

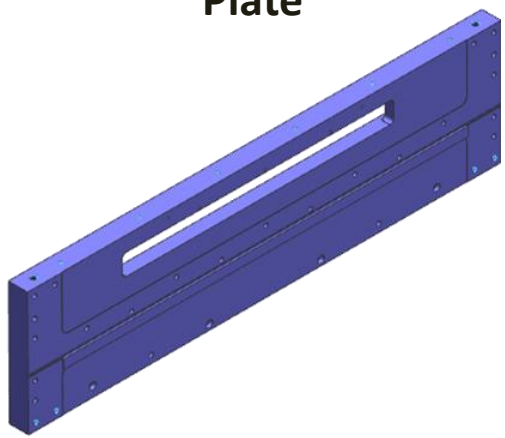

Frame

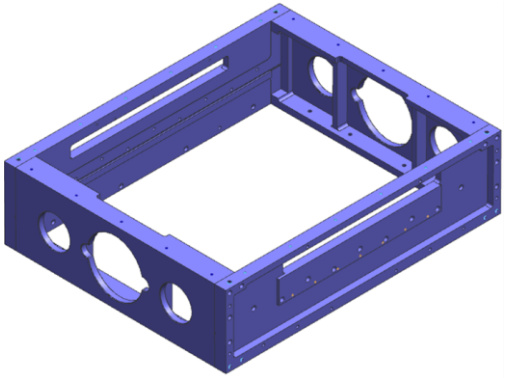

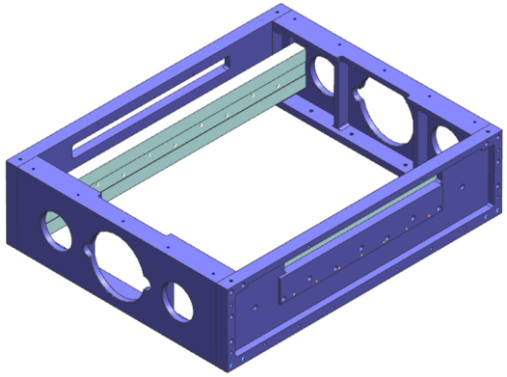

Frame & guide-ways

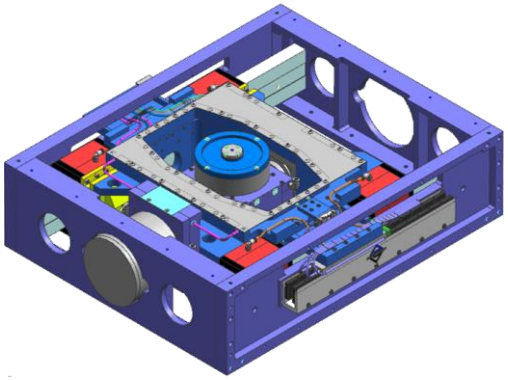

Motion module

Cranfield UNIVERSITY EPSRC Pioneering research and skills UNIVERSITY OF CAMBRIDGE

# System identification:

## experimental equipment

EPSRC Centre for innovative manufacturing in ultra precision


Frame - “free-free” support

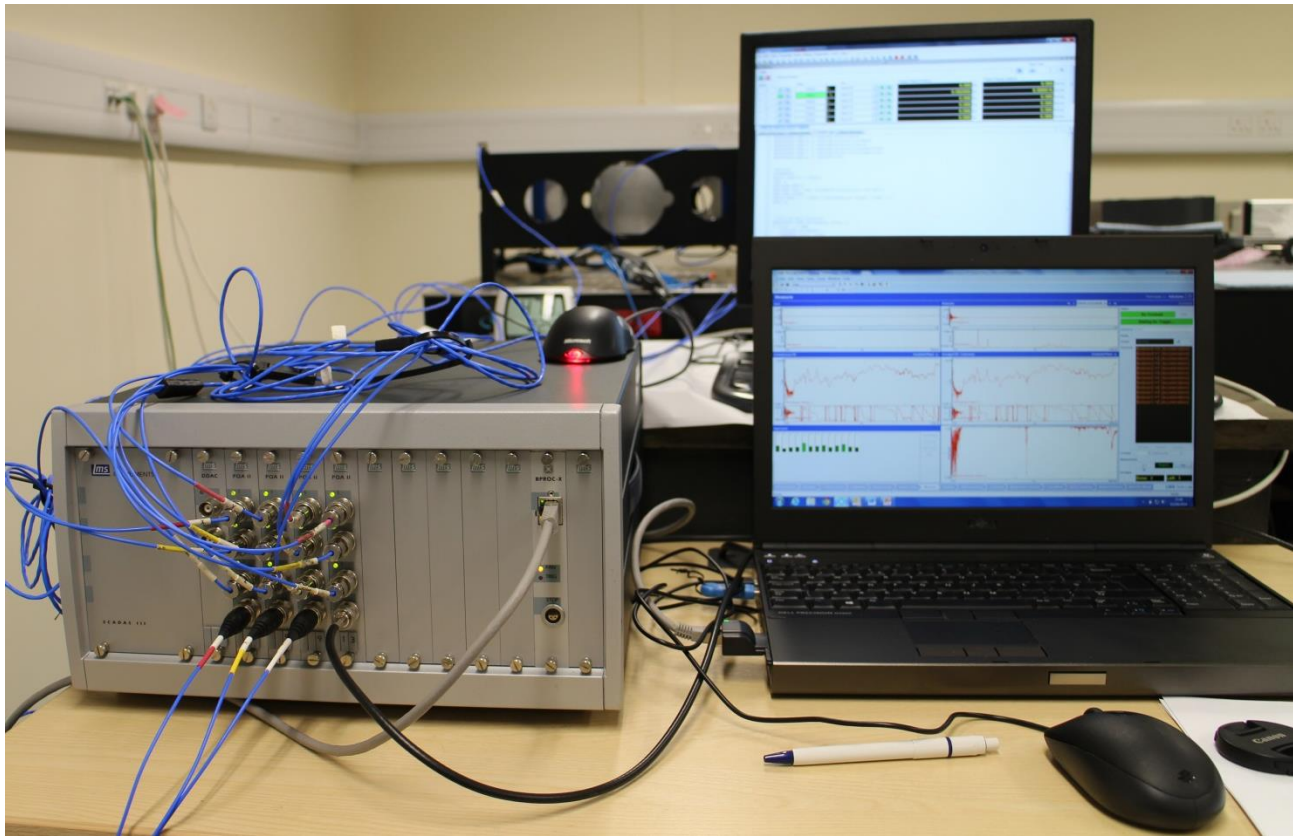

Motion module – operational measurements

Cranfield UNIVERSITY EPSRC Pioneering research and skills UNIVERSITY OF CAMBRIDGE

# System identification:

## modal measurements results

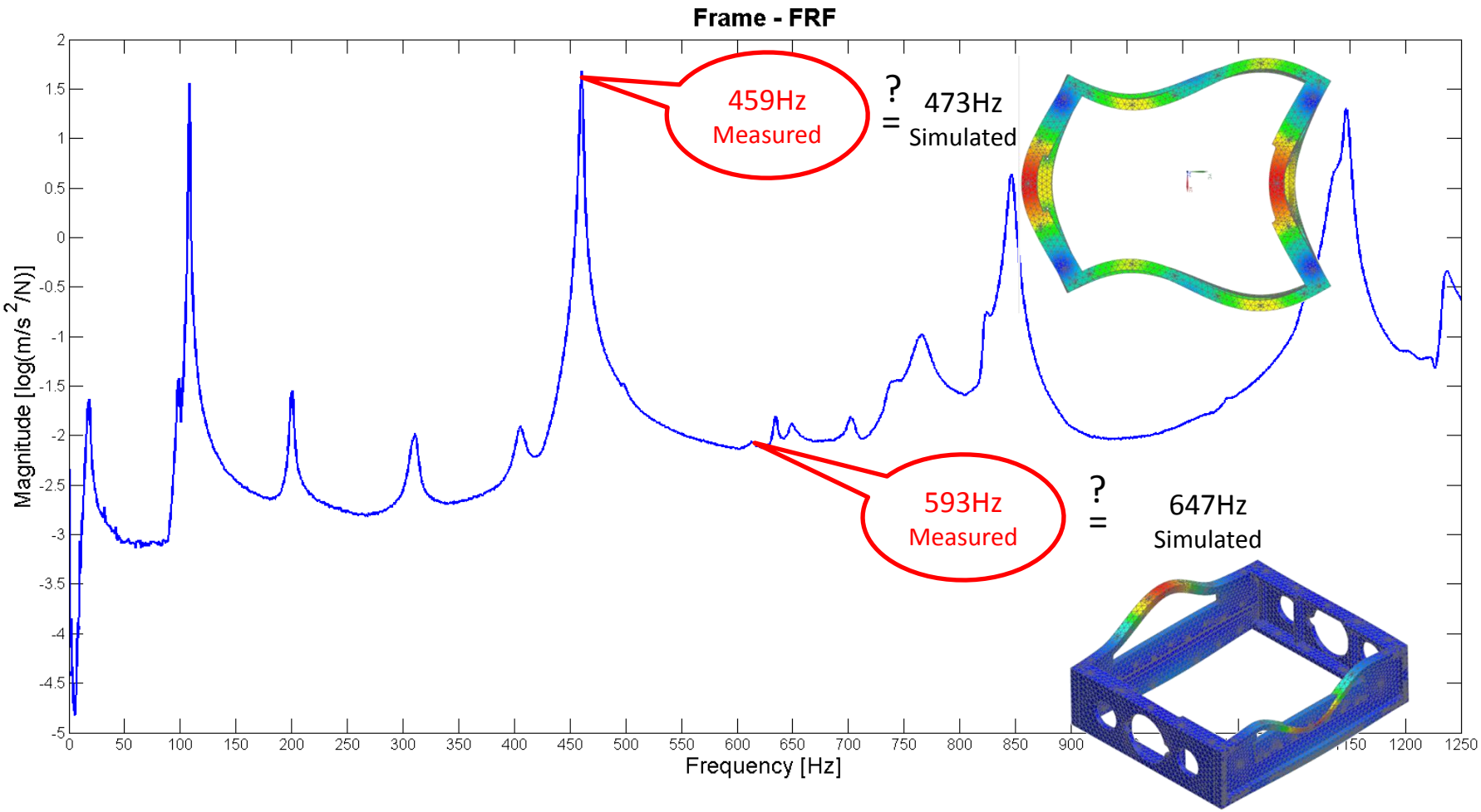

# System identification:

## correlation: FEM & modal measurements

EPSRC Centre for innovative manufacturing in ultra precision

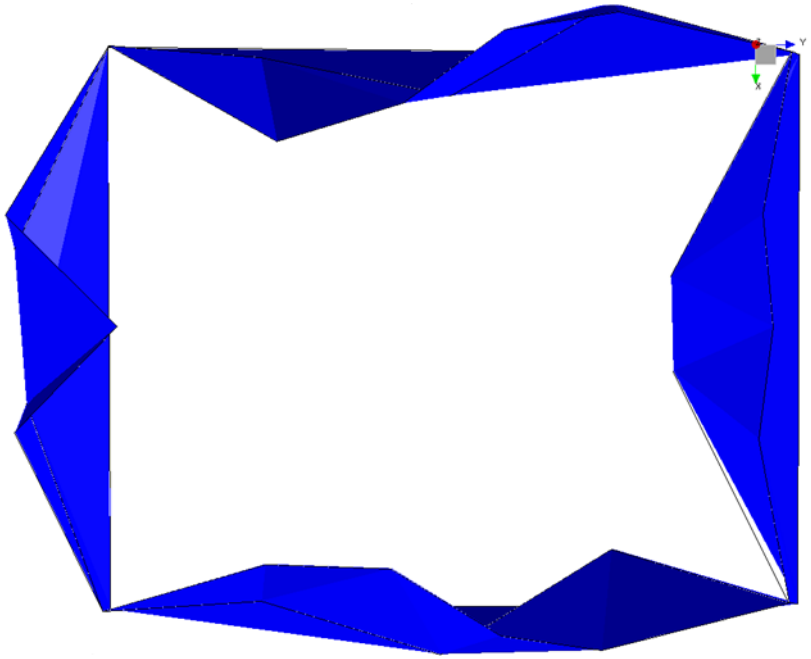

Modal measurements – 459Hz

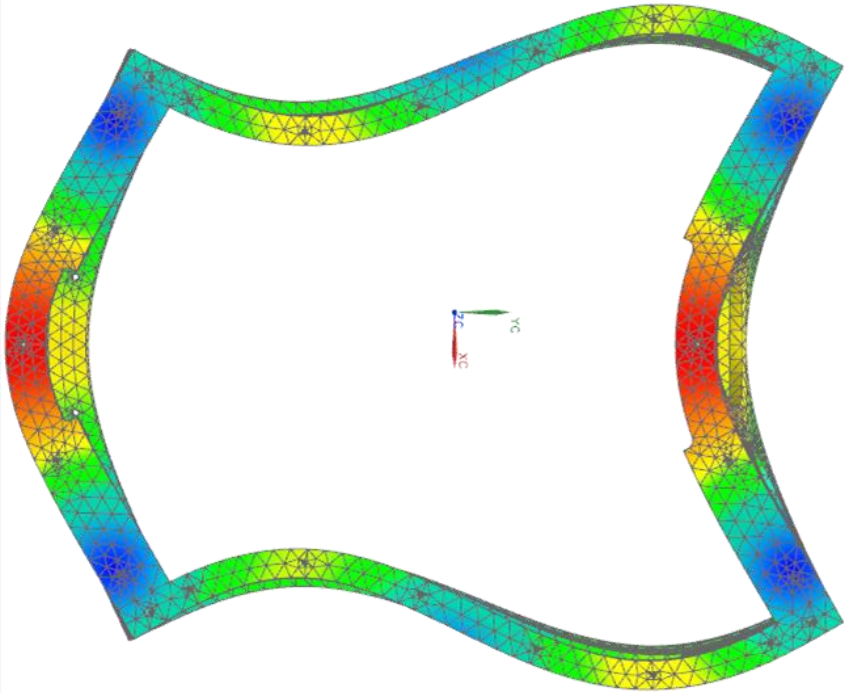

FEM – 473Hz

Cranfield UNIVERSITY EPSRC Pioneering research and skills UNIVERSITY OF CAMBRIDGE

# System identification:

## correlation: FEM & modal measurements

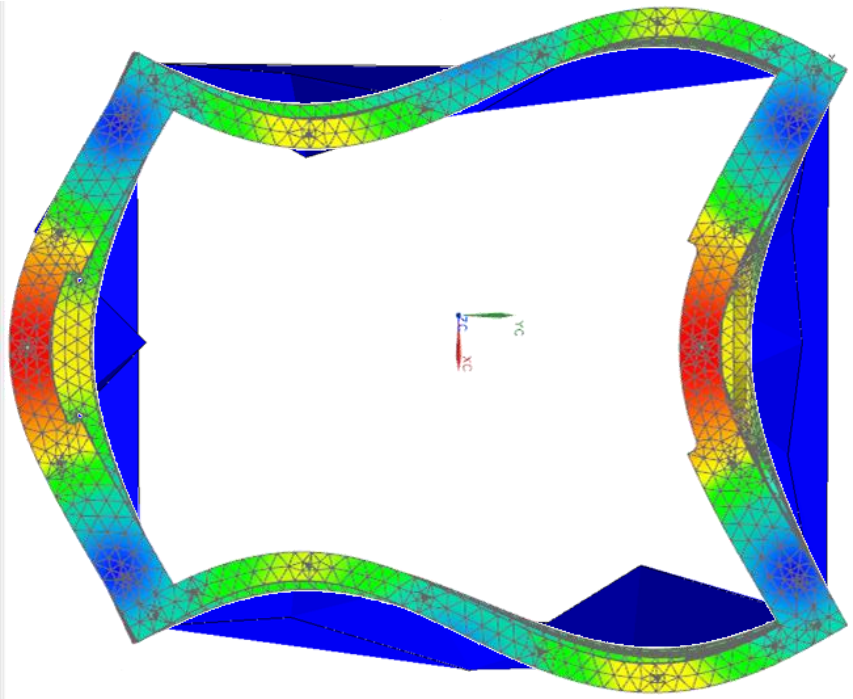

Modal measurements – 459Hz

FEM – 473Hz

# System identification:

## correlation: FEM & modal measurements

EPSRC Centre for innovative manufacturing in ultra precision

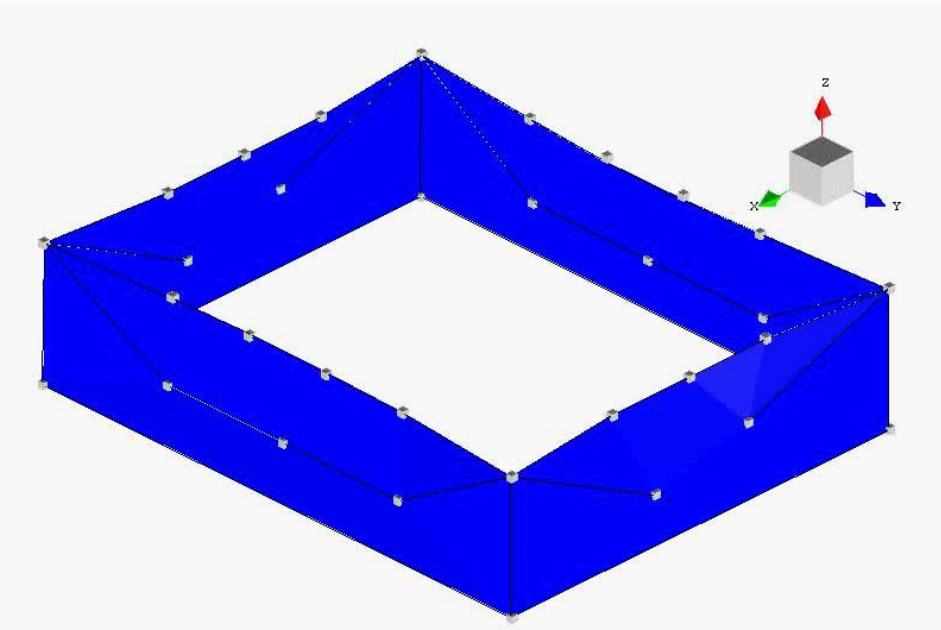


Modal measurements – 593Hz

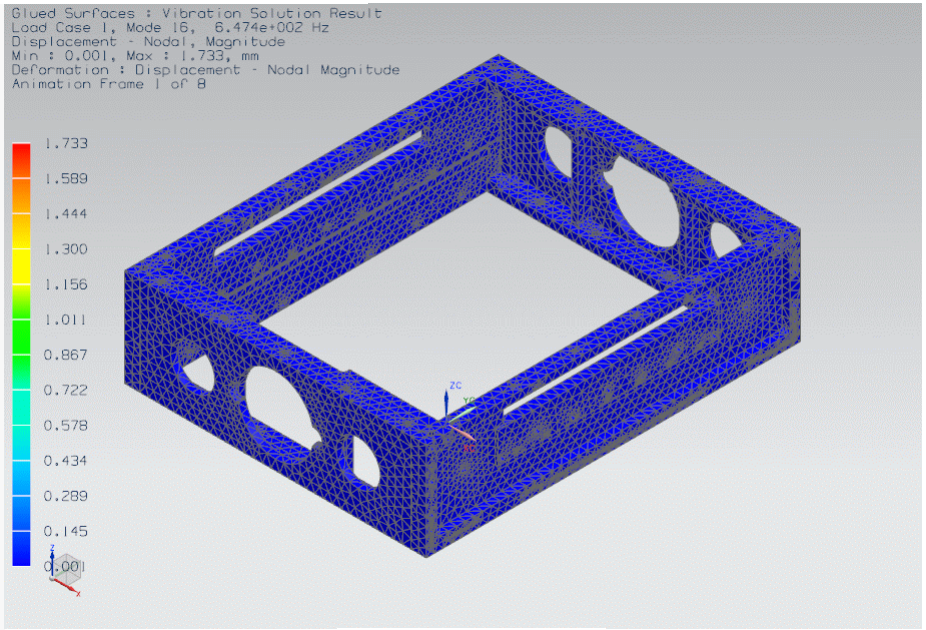


FEM – 647Hz

Cranfield UNIVERSITY EPSRC Pioneering research and skills UNIVERSITY OF CAMBRIDGE

# System identification:

## correlation: FEM & modal measurements

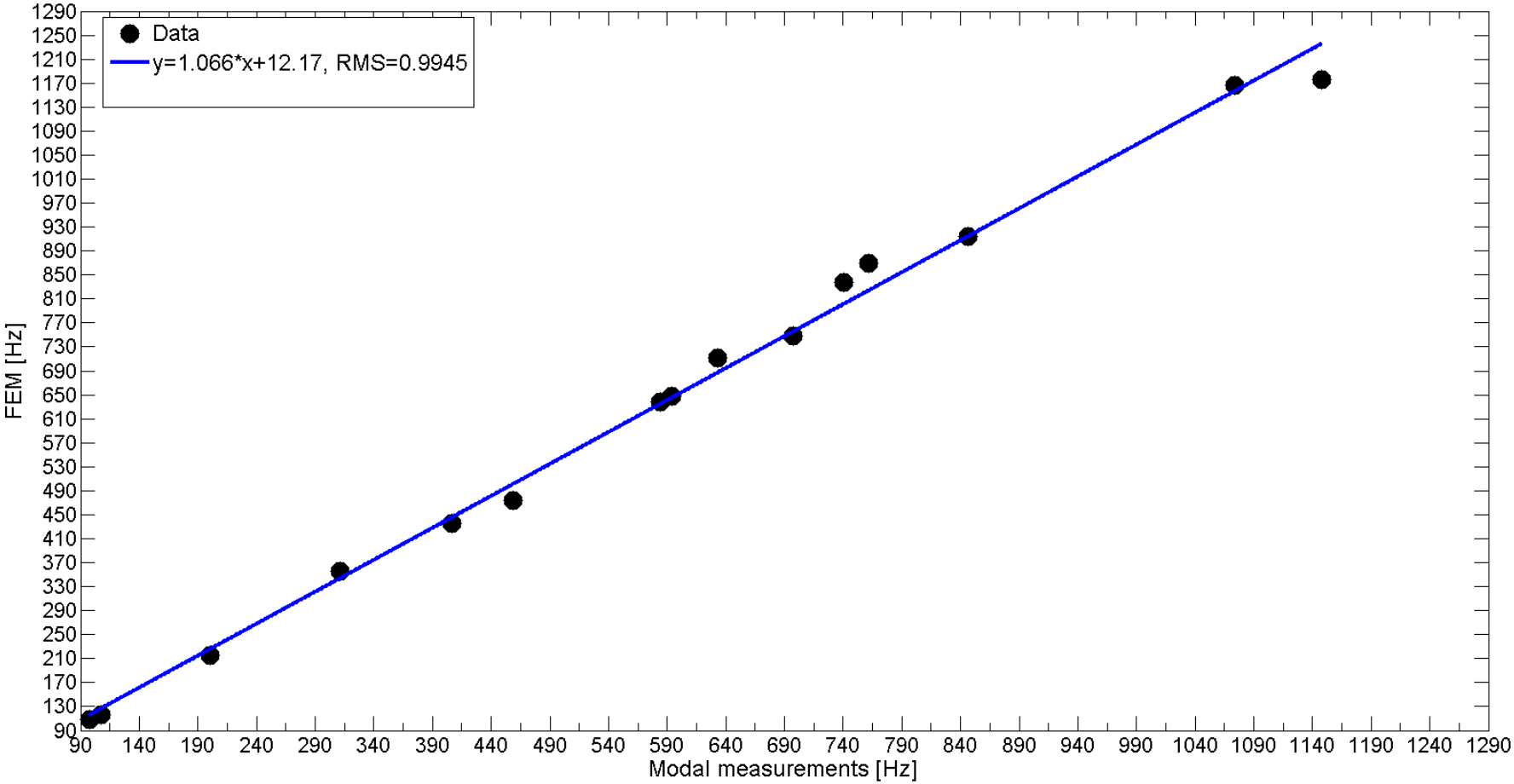

# System identification:

## control & modal measurements

EPSRC Centre for innovative manufacturing in ultra precision

### Motion module

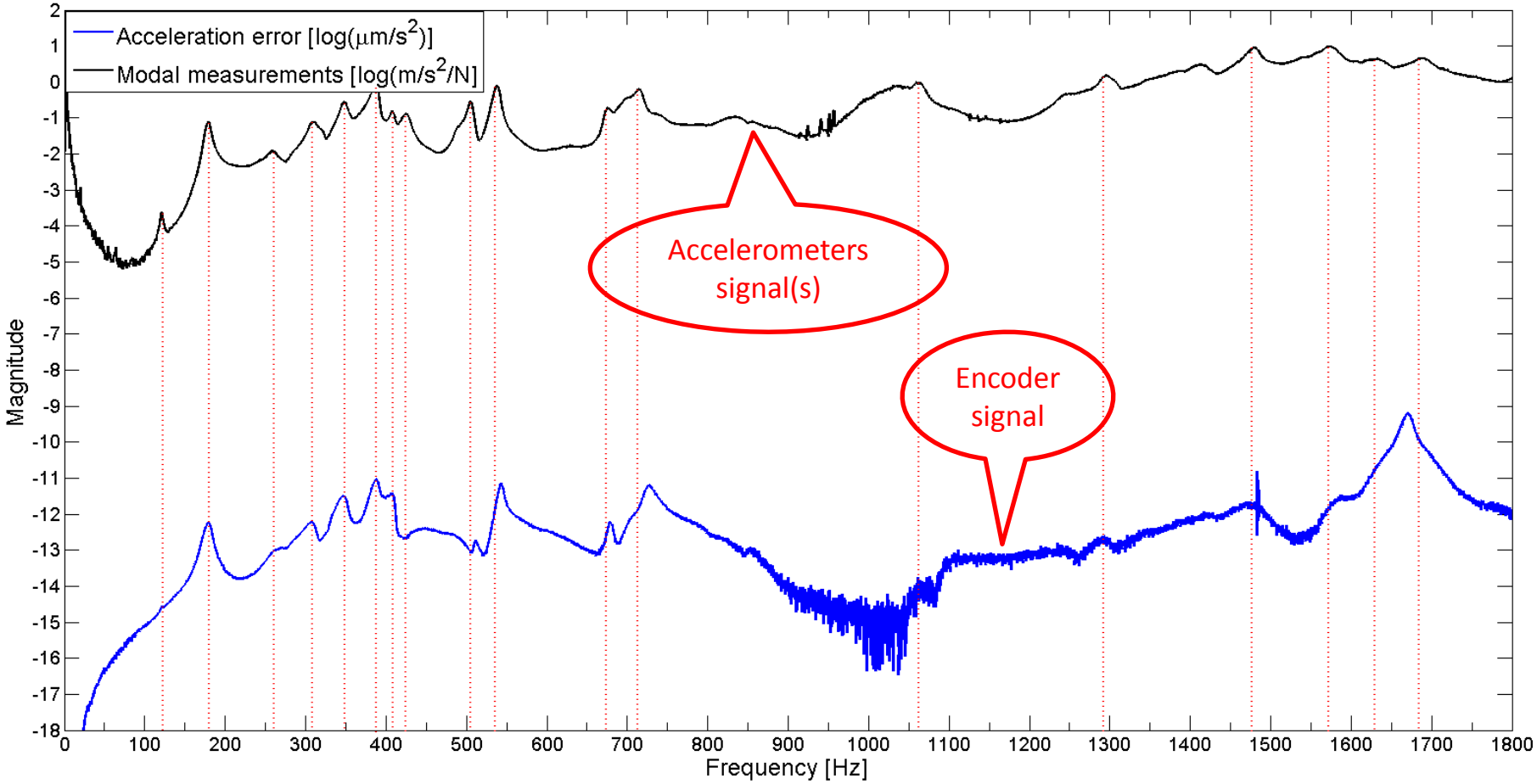


Cranfield UNIVERSITY EPSRC Pioneering research and skills UNIVERSITY OF CAMBRIDGE

# What are the conclusions?

EPSRC Centre for innovative manufacturing in ultra precision

- Bottom-up system identification methodology was adopted

- System identification – different techniques showed a good correlation

- FEM-modal measurements correlation – input for mechanical design improvements

- Modal measurements analysis – input for control design

Cranfield UNIVERSITY EPSRC Pioneering research and skills UNIVERSITY OF CAMBRIDGE

# What's next?

EPSRC Centre for innovative manufacturing in ultra precision

- **Control techniques for "flexible frame":**
  **Adaptive? Acceleration Feedforward / Feedback?**

- **Optimal sensor placement:**
  **Number, Location, Specification**

# Thank you

EPSRC Centre for innovative manufacturing in ultra precision

# Q & A

Cranfield UNIVERSITY

EPSRC Pioneering research and skills

UNIVERSITY OF CAMBRIDGE