Engineering and Physical Sciences Research Council

UNIVERSITY OF CAMBRIDGE

Cranfield UNIVERSITY

EPSRC Centre for innovative manufacturing in ultra precision

Centre for innovative manufacturing in ultra precision

Metrology Technologies to Enable Reel to Reel Processing of Emerging Products

20th November 2013

National Physical Laboratory

EPSRC Pioneering research and skills

The EPSRC Centre for Innovative Manufacturing in Ultra Precision is managed by Cranfield and Cambridge Universities

www.ultraprecision.org

EPSRC Centre for innovative manufacturing in ultra precision

UNIVERSITY OF CAMBRIDGE

Cranfield UNIVERSITY

10-00	Welcome	Paul Morantz Cranfield
10-10	Dynamically controlling the position and distortion of transparent flexible film (to microns)	Paul Morantz Cranfield
10-40	Reel to reel production of capacitive touch panels on thin flexible glass	Phil Rumsby M-Solv
11-10	BREAK	
11-30	Metrology for in process metrology for roll to roll production of flexible photo voltaics	Liam Blunt Huddersfield
12-00	Fabrication processes for flexible display backplanes, current requirements for metrology and challenges for future R2R processes	Simon Ogier CPI
12-30	LUNCH	
13-30	Precision surface for day lighting	Nick Walker iXscient
14-00	Metrology challenges for highly parallel micro-manufacture	Richard Leach NPL
14-30	Closing remarks	Richard Leach/ Paul Morantz
14-45	Optional tour	

Overview of the EPSRC Centres for Innovative Manufacturing

Dr Antony Chapman
Portfolio Manager,
Manufacturing the Future

Background

- Manufacturing is currently a political hot topic.
- Manufacturing has been an important component of the UK economy for at least 250 years.
- The nature of manufacturing is changing.
- The EPSRC Centres for Innovative Manufacturing (EPSRC Centres) are the latest in a line of EPSRC funding to support manufacturing research in UK universities.
  - Innovative Manufacturing Research Centres (IMRC).
  - Innovative Manufacturing initiative (IMI).
  - Application of Computers to Manufacturing Engineering (ACME).

Aims of the EPSRC Centres

- To create, deliver and disseminate world-leading research.
- To address major long-term manufacturing challenges/and or emergent manufacturing opportunities.
- To provide strong support for UK manufacturing industries.
- To enhance the global profile and significance of UK research.
- To create a national network of expertise in manufacturing research knowledge.
- To provide outreach to other centres and relevant research groups.

Details of the EPSRC Centres calls

- There are 16 EPSRC Centres, funded through three separate calls.
- Typical EPSRC Investment for a Centre is £5-6m over 5 years.
- The total EPSRC investment is in excess of £80m..
- Over 200 UK and international business partners drawing in significant additional investment.
- Multinationals to SMEs.
- Financial contributions from host universities.
- Links with HVM Catapult institutions, trade bodies, KTN etc.
- No more calls for EPSRC Centres within the current spending review.

What is an EPSRC Centre?

- Strategic investment: a focus for existing manufacturing strengths in the UK.
- National focus for the UK.
- Significant outreach programmes: A Centre *must* be more than just research projects – it must have its own identity.
- Flexible budget: flagship projects and trailblazer projects.
- Centres can also apply for responsive mode projects in EPSRC.
- Continuation beyond the initial period with a mixture of funding sources.
- Regulated by Advisory board and management board.
- Subject to mid-term review.

Regenerative Medicine

Ultra Precision

Laser-Based Production

Liquid Metal Engineering

Industrial Sustainability

Photonics

Intelligent Automation

Medical Devices

Advanced Metrology

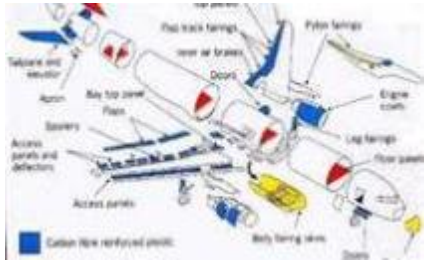

Composites

Additive Manufacturing

Food

Large-Area Electronics

Through-Life Engineering

Macromolecular Therapies

CMAC

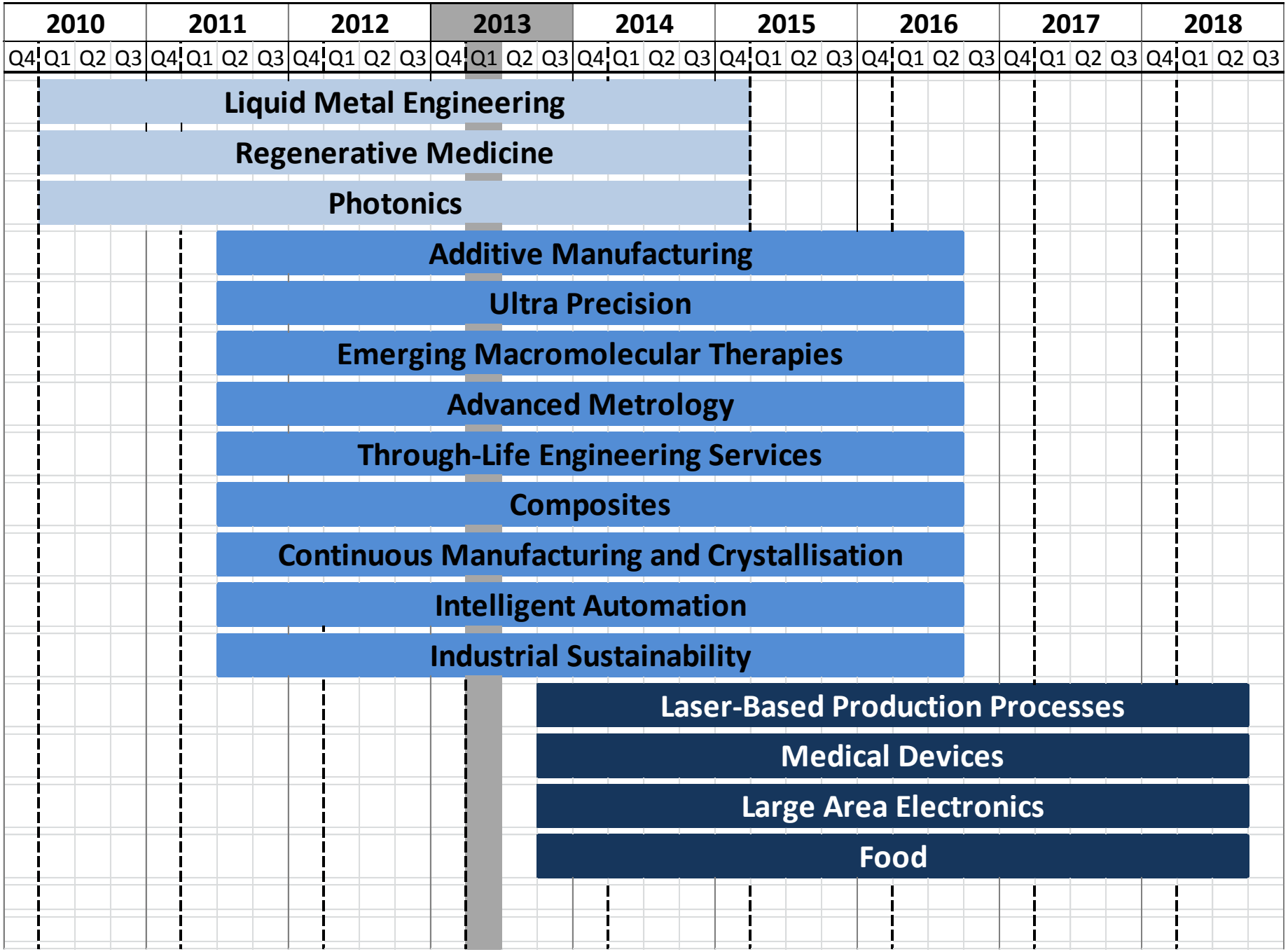
2010
2011
2012
2013
2014
2015
2016
2017
2018
Q4 Q1 Q2 Q3 Q4 Q1 Q2 Q3 Q4 Q1 Q2 Q3 Q4 Q1 Q2 Q3 Q4 Q1 Q2 Q3 Q4 Q1 Q2 Q3 Q4 Q1 Q2 Q3 Q4 Q1 Q2 Q3 Q4 Q1 Q2 Q3
Liquid Metal Engineering
Regenerative Medicine
Photonics
Additive Manufacturing
Ultra Precision
Emerging Macromolecular Therapies
Advanced Metrology
Through-Life Engineering Services
Composites
Continuous Manufacturing and Crystallisation
Intelligent Automation
Industrial Sustainability
Laser-Based Production Processes
Medical Devices
Large Area Electronics
Food

Lead Universities

University of Strathclyde
Continuous Manufacturing and Crystallisation

University of Huddersfield
Advanced Metrology

Loughborough University
Intelligent Automation, Regenerative Medicine

Cranfield University
Through-Life Engineering Services, Ultra-precision

University of Southampton
Photonics

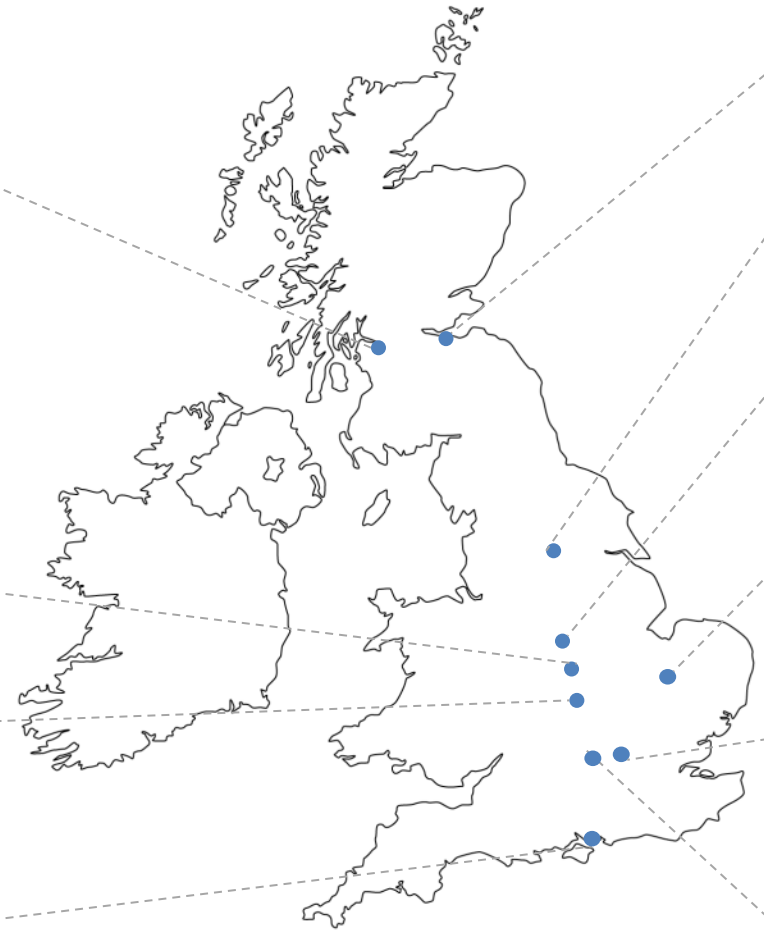

Heriot Watt University
Laser-Based Processes

University of Leeds
Medical Devices

University of Nottingham
Additive Manufacturing, Food, Composites

University of Cambridge
Industrial Sustainability, Large-area Electronics

UCL
Emerging Macromolecular Therapies

Brunel University
Liquid Metal Engineering

Partner Universities

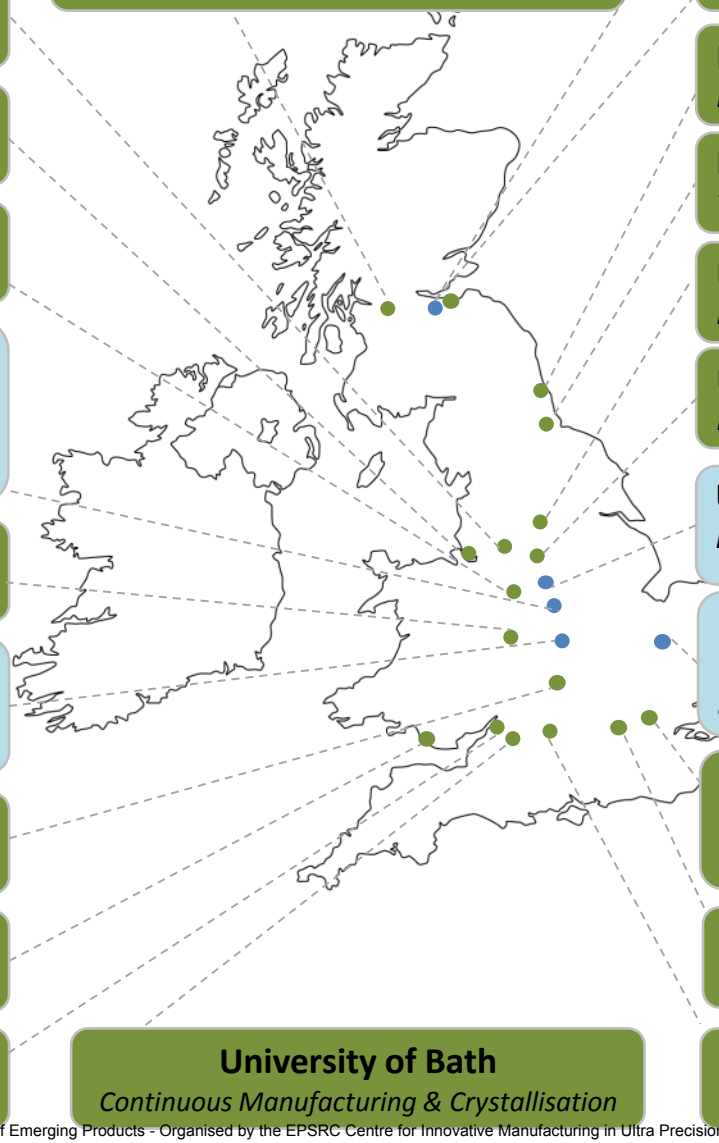

University of Glasgow
Continuous Manufacturing & Crystallisation

University of Manchester
Composites, Large-Area Electronics

University of Liverpool
Laser-Based Processes

Keele University
Regenerative Medicine

Loughborough University
Industrial Sustainability, Additive manufacturing, Continuous Manufacturing & Crystallisation, Regenerative Medicine, Food

University of Birmingham
Liquid Metal Engineering, Food

Cranfield University
Intelligent Automation, Composites, Industrial Sustainability. Laser-Based Processes

University of Oxford
Liquid Metal Engineering

Swansea University
Large-Area Electronics

University of Bristol
Composites

University of Bath
Continuous Manufacturing & Crystallisation

Heriot Watt University
Continuous Manufacturing & Crystallisation

University of Edinburgh
Continuous Manufacturing & Crystallisation

Newcastle University
Medical Devices

Durham University
Through-Life Engineering Services

University of Bradford
Medical Devices

University of Sheffield
Medical Devices

University of Nottingham
Regenerative Medicine, Medical Devices

University of Cambridge
Ultra Precision, Continuous Manufacturing & Crystallisation, Laser-Based Processes

Imperial College London
Emerging Macromolecular Therapies, Industrial Sustainability

National Physical Laboratory
Advanced Metrology, Ultra Precision

STFC
Advanced Metrology

Training: CDTs/IDCs

Continuous Manufacturing and Crystallisation
University of Strathclyde

Composites Manufacturing
University of Bristol

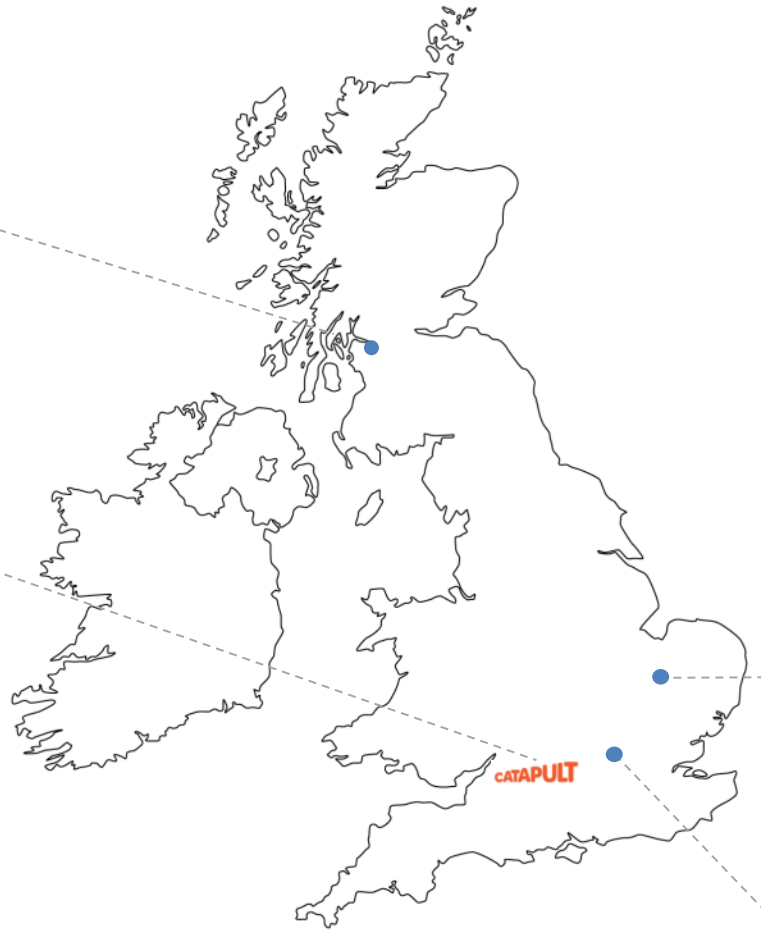

Ultra Precision
University of Cambridge

Macromolecular Therapies
UCL

Conclusions

- The EPSRC Centres are the flagship investment of the EPSRC Manufacturing the Future Theme.
- 16 Centres covering a range of key manufacturing research topics. 27 different institutions with a wide geographical spread.
- Links with other EPSRC strategic activities.
- Initial five year investment of ca. £5m plus match-funding.
- Long-term investment with the intention of continuation beyond the initial funding period (*Not necessarily EPSRC*).
- Focal point for similar research activities across the UK.
- Manufacturing the Future still provides funding for other research (Calls and Responsive Mode).

EPSRC Centre for innovative manufacturing in ultra precision

UNIVERSITY OF CAMBRIDGE

Cranfield UNIVERSITY

UP Centre's Aim

To be the world's foremost research centre for innovation in next generation ultra-precision production systems and products, with global outreach.

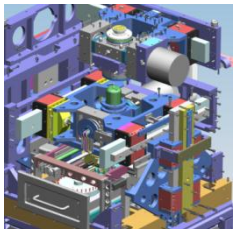

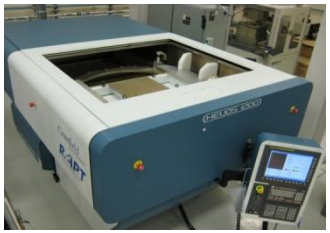
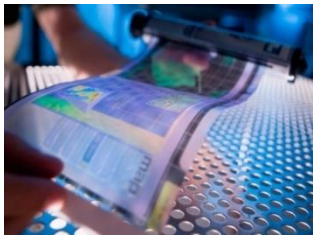

Foster and accelerate development of emerging high value products through its dedicated production compatible ultra precision process research platforms and internationally leading research portfolio.

Facilitate the engagement of the UK precision manufacturing supply chain into the future wealth creating opportunities of emerging sectors.

Act as a UK knowledge hub for next generation production systems and establish a network with a supporting UK (and wider) capabilities/facilities data base

www.ultraprecision.org

EPSRC Centre for innovative manufacturing in ultra precision

UNIVERSITY OF CAMBRIDGE

Cranfield UNIVERSITY

Steering Group
Independent Chairman – Paul Atherton + 50% of Members

ESPRC Centre Management Team

P. Shore, B. O'Neill, B. Milne, N. Walker, R. Leach, **National Strategy Manager** + Platform leaders

National Strategy	Research Portfolio	Research Platforms
Ultra Precision Network	**UP "processes" Strands**	**Nano FIB Platform**
Dissemination, UK forum, Joint research proposals, Industrial accessibility.	Topics: laser/fib interaction, miniaturisation of plasmas, plasma/laser interaction, multi-material substrate processing, rapid feature creation processes, imprint/emboss methods, large area diamond machining, others.	M/C builder, process tech supply
Educational Stream		Tooling, security, nano-print
Government and academic awareness, events, UK student engagement, technology demonstrators.	**UP "machines" Strands**	**Meso Platform**
Translation to wealth	Topics: multi-process integration systems, energy beam combination systems (analysis, modelling and systems design and test), accretion process "tool" setting and in-process monitoring, imprint and embossing sub systems research, quality control: pattern recognition, combination proc monitoring, 3D surface metrology, others.	M/C builder, controls, metrology
Building IP; research translation; collaboration with business; venture days; licence, spin-out and other IP exploitation.		Medical, energy harvest, defence
Ultra Precision Web Services		**Macro Platform**
Facilitating access to Ultra-Precision expertise and eqpt., covering UK research, commercial developments, process and skills database, road mapping outputs.		M/C builder, controls, metrology
		Display, solar lighting
		Other systems

www.ultraprecision.org

EPSRC Centre for innovative manufacturing in ultra precision

Cranfield UNIVERSITY

National Strategy

Martin O'Hara

Enza Giaracuni

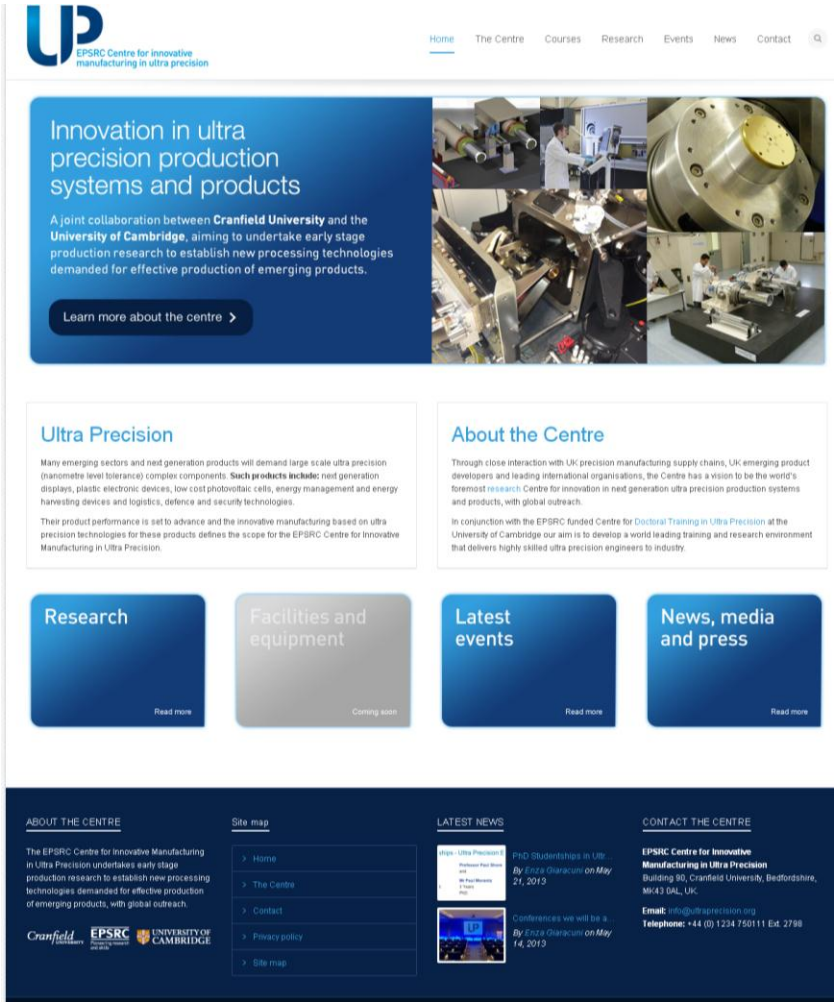

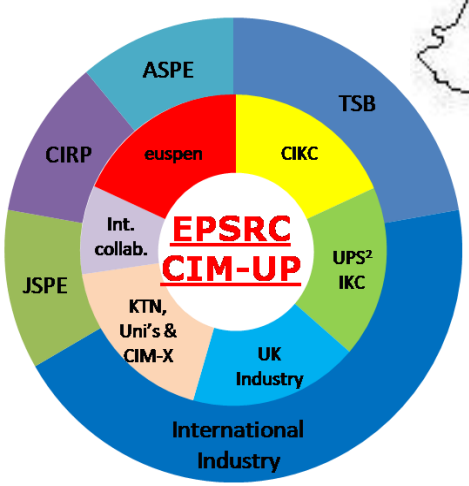

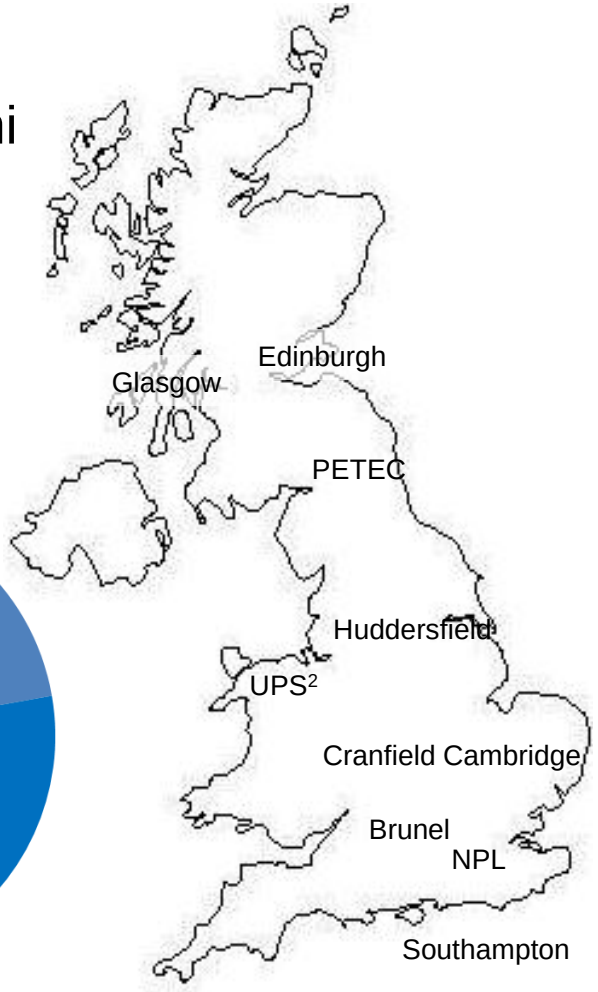

www.ultraprecision.org

EPSRC Centre for innovative manufacturing in ultra precision

UNIVERSITY OF CAMBRIDGE

Cranfield UNIVERSITY

National Strategy

- Selected future events
  - Precision Engineering Short Course
    25-29 November 2013, EPSRC Centre in Ultra Precision, Cranfield
  - Plastic Electronics Fabrication Technologies
    19 February 2014, CPI, Sedgefield
  - Future Display Technologies and Production Demand,
    EPSRC Centre in Ultra Precision, Cambridge

EPSRC Centre for innovative manufacturing in ultra precision

UNIVERSITY OF CAMBRIDGE

Cranfield UNIVERSITY

Research Portfolio

Strand 1) Ultra Precision Processes

i. *Combined laser / focused ion beam processing*
ii. *Miniaturisation of plasma processes*
iii. *High speed fine feature creation*
iv. *Nano-imprint, micrometre embossing, resist application and curing*
v. *Diamond machining of large scale multi-material substrates*

Strand 2) Ultra Precision Machines

i. *Energy beam monitoring technologies*
ii. *Control system integration of plasma, laser, imprint, etc*
iii. *Process alignment, thermal management, vibration suppression systems*
iv. *Systems for adopting nano-imprint/embossing in ultra precision m/cs*
v. *Rapid in-process quality control systems for pattern recognition, feature size, shape and distribution analysis, tool shape/beam monitoring*
vi. *In situ process feedback techniques*
vii. *Plasma processing machine development*
viii. *Ion beam figuring developments*

~ 24 PhD students or research assistants will be engaged

www.ultraprecision.org

EPSRC Centre for innovative manufacturing in ultra precision

UNIVERSITY OF CAMBRIDGE

Cranfield UNIVERSITY

Research Platforms (proposal – Oct 2010)

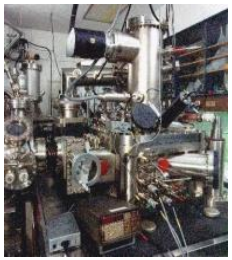

Plasma, Laser, Ion

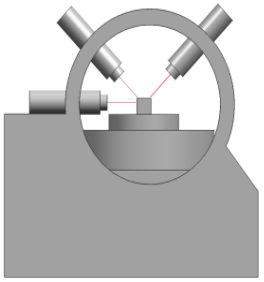

Nano FIB Platform (vacuum)

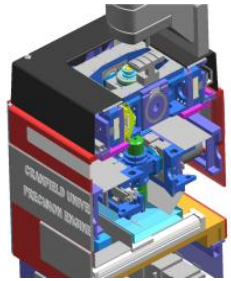

Diamond, Plasma, Print, Imprint Coat, Laser

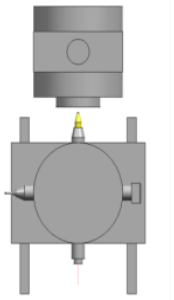

Meso scale Platform (atmospheric)

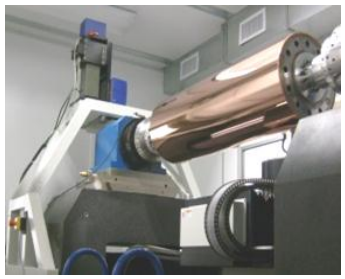

Diamond, Plasma, Print Coat, Imprint Emboss Laser

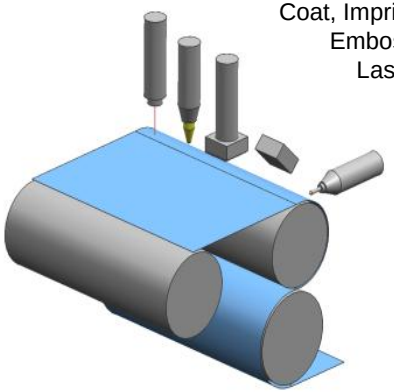

Macro “r2r” Platform (atmospheric)

www.ultraprecision.org

EPSRC Centre for innovative manufacturing in ultra precision

UNIVERSITY OF CAMBRIDGE

Cranfield UNIVERSITY

Platform 1 - Nano-FIB Platform

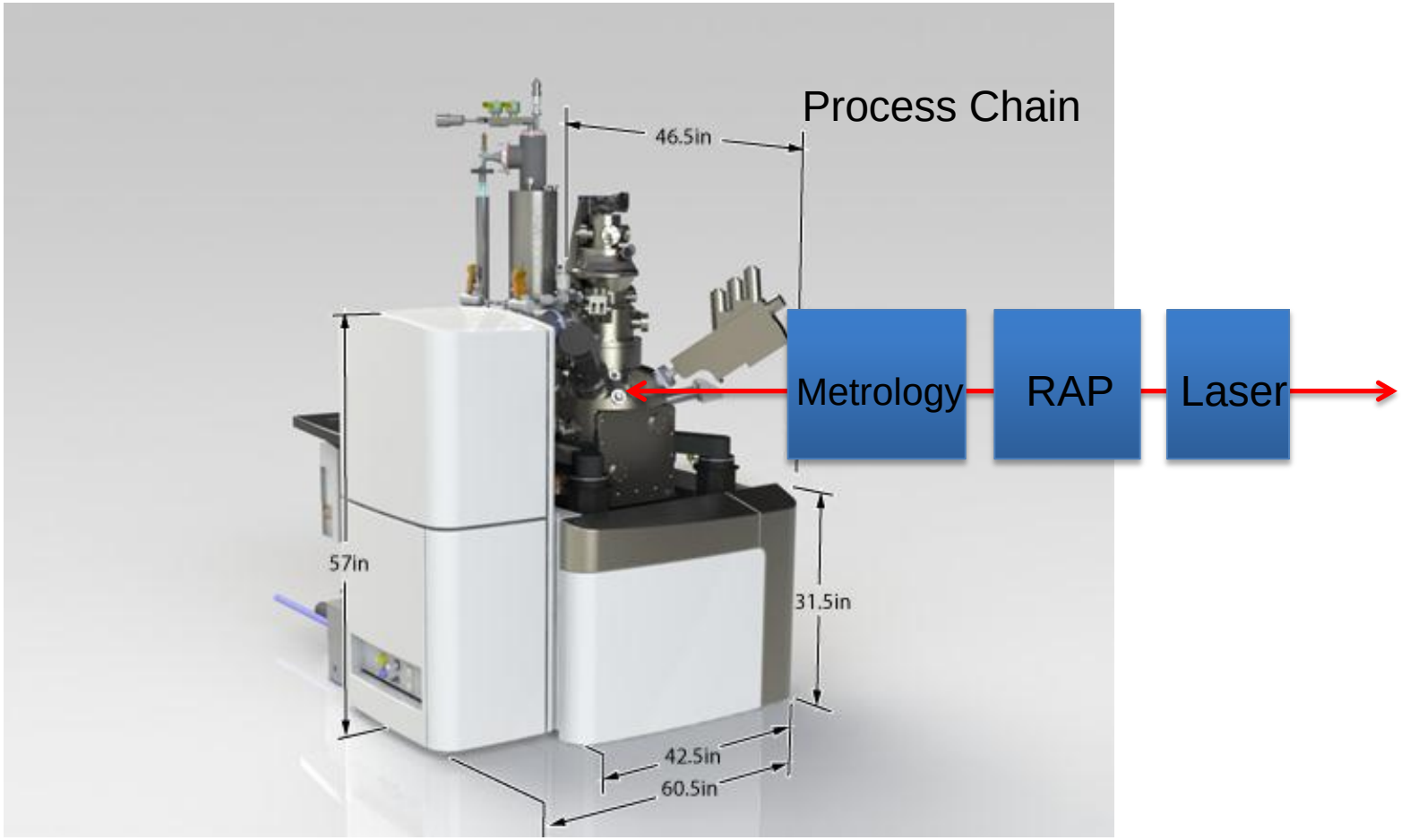

www.ultraprecision.org

EPSRC Centre for innovative manufacturing in ultra precision

Cranfield UNIVERSITY

Platform 2 - Meso-scale Platform

Microwave plasma processing

Laser assisted plasma processing

Nano-imprint processing

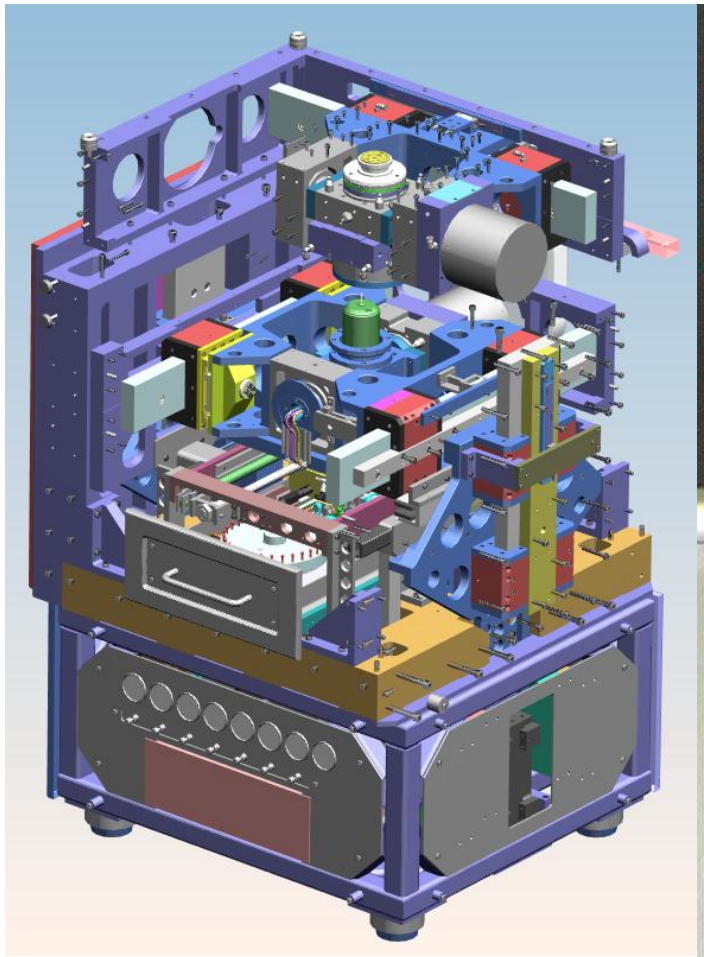

www.ultraprecision.org

EPSRC Centre for innovative manufacturing in ultra precision

Cranfield UNIVERSITY

Platform 2 - Micro-beam processing.

- Identified product demands indicate the following target specification:
- Laser / Plasma figuring: & structuring
- Rapid fine feature creation but on
- λ/40 form surfaces in
- ULE / Silica, SiC & Si
- Plasma beam footprint 1 - 5mm
- 1 hour processing time for 150mm surface from 2 um P-V form error
- Laser assist :
- Temperature enhancement 200-400°C
- Laser beam footprint 0.05 – 2mm

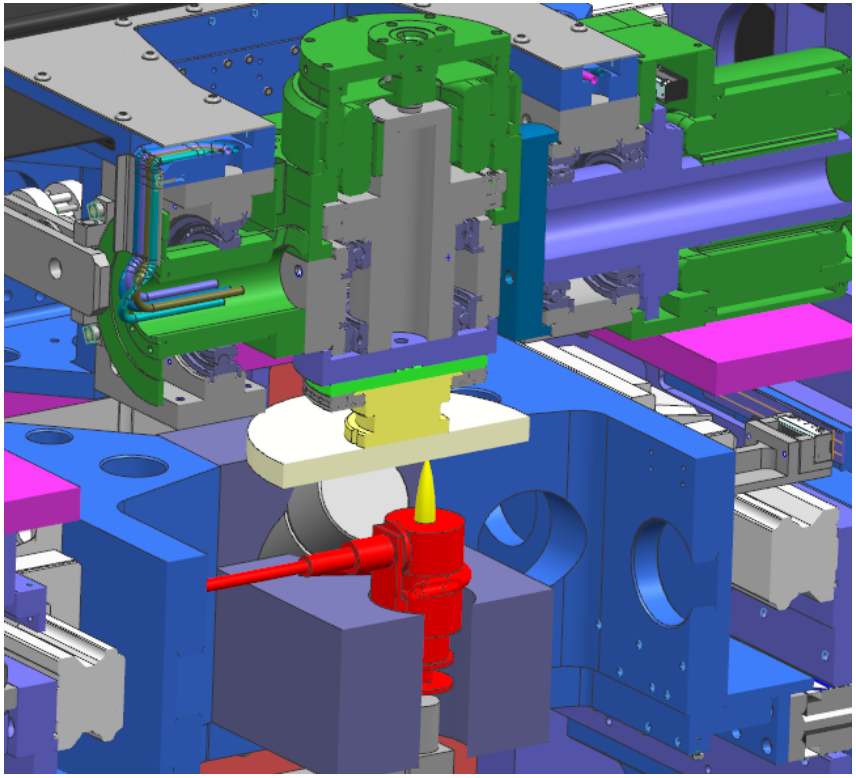

Plasma processing from below

www.ultraprecision.org

EPSRC Centre for innovative manufacturing in ultra precision

Cranfield UNIVERSITY

Platform 3 - Reel to Reel Platform

Based on a modular concept with 48” width capacity and roll diameter capacity of 300-500mm.

Critical functional requirements:

- Precision multi stage embossing module with pseudo constant throughput, 200nm re-positioning accuracy
- Precision alignment module for 2 or 3 film lamination at 500nm
- Alignment measuring module with 100nm accuracy

Apply processes:

- Lacquer application, embossing, UV/flash cure, inkjet, laser, precision lamination

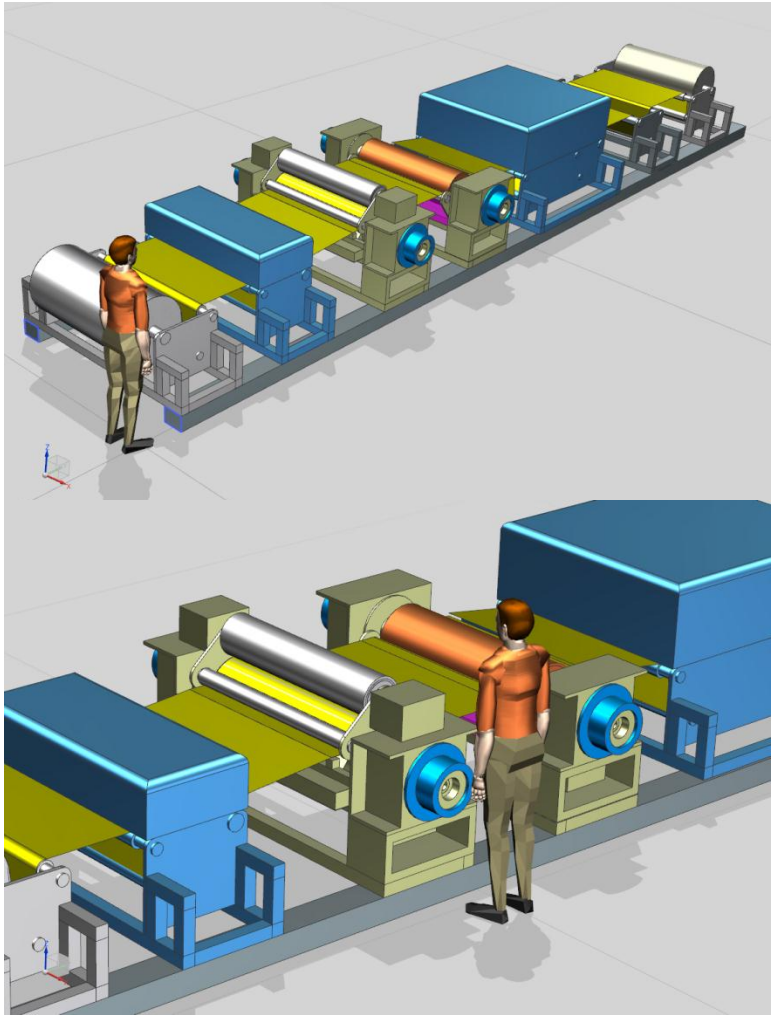

www.ultraprecision.org

EPSRC Centre for innovative manufacturing in ultra precision

Cranfield UNIVERSITY

Why are we here? And what is it all for?

17 October 2011

www.ultraprecision.org

EPSRC Centre for innovative manufacturing in ultra precision

Cranfield UNIVERSITY

Why are we here? And what is it all for?

Market Drivers

- •Sensors
- •Capacitive sensor array (touch screen)
- •Solar + heat energy – energy
- •Cheaper PV
- Micro fluidics
- •Non thermal
- •Profiled
- •Super control
- •Next gen display
- •Large displays
- •OLED active matrix
- Batteries
- Speakers
- Lighting systems
- Wave guides
- UV Curing Ablation Photo resist/ etch
- Fingerprint resistant
- R2R – electronics, flexible, pick and place
- Smart packaging

Summary

Connected mobile world
Low carbon
Ageing population
medical

Plastic electronics - Most process registration
Touch screen
Packaging/ embossing

Knowledge Gaps

- Metrology
- Materials
  - •Expensive
  - •Availability
  - •Exotic materials
- Interfacing
  - •Adhesion
  - •Mechanical failure
  - •Leaching
  - •Heat dissipation
  - •Power distribution
- Process window
  Multiple process
  High parallel
- Process integration into R2R

Summary

Materials

R2R
- •Photoresist
- •Polyester
- •Paper
- •Thin glass
- •Metal foils
- •Flex glass
- •Plastics

- •Metals
- •Multi area coatings
- •Liquid source matts
- •Flex glass
- •Polymer coater
- •Polymers
- •Material
- •Coating of thin film on polymer and metallic foils
- •Polymers-paper
- •Metallic – foil
- •Si – foils
- •Multi-stratified

Industrial Feasibility

- •Thermal –rolling
- •Humidity – rolling
- •registration/ resolution
- •Throughput (maybe)
- Metrology (limitation)
- •Functional test in situ
- •Temp control
- •Registration
- •Resolution
- •Glass
- •Plastic
- •Metal foil
- •Inks
- •Polymers
- •Silver/ copper
- •Carbon (graphene, amorphous
- •Flexi-glass
- •Foil
- •mesh
- •Display
- •OLED lights from – tablet to R2R.
- •Feature size registration
- Plastic electronics
  10-100mn feature
  Panel size
  •R2R
  •Feasibility
- 20nm pixels - 2nm registration

Summary

Registration
Feature size
flexibility

Cost us size or speed of machine

Innovations

- Areas for Innovation
- Machine control - dynamics
- Material development
- Cost per part (value added)
  Area scalability
- In-situ metrology
  Repair strategies
- High dynamic range metrology
- Materials
  P-E
  PV
  Touch screen

Summary

Processes

- •Embossing
- •Gradial printing
- •Flexible printing
- •Inline ablation
- •Evaperative
- •Wet coating
- •Transfer
- •Ink Jet
- •Laser ablative
- •In line process
- •Additive/ subtractive

- •Screen printing
- •PVD
- •EVD
- •plasma processing
- •EB-PVD
- •plasma polymerisation
- •EB processing
- •Imprinting
- •Metrology
- •Defect detection

Future Targets

5Y	10Y	15Y
•Sensor arrays •Segmented displays •OLED lighting •Func packaging •Touch screens •Packaging/ embossing	Roll-up display Daylight display	Registration 100nm Multi process
Micro features 1000 – 1500mm	P-E PV	

Summary

Enablers & Barriers

- Tool mastering
- Environmental control
- Barrier technology
- Temperature control
- Functional testing
  Material uniformity
  Acceptable
  Produceable
  measureable
- Supply chain development for inks materials etc
- Hopper
  Min quantity
- Material
  •Stability
  •Shelf life
  •Cost of storage

Summary

Machine Tools / Scale / Apps

Scale
- •12in +
- •1000-1500mm
- •Nicron freature
- •Size A or resolution
- •1 m wide web
- •2 metres wide, many metres long
- •Features: 200mm
- •Few mm's xy
- •10's mm Z

Applications
- •Large displays
- •Micro-fluidic structures
- •Smart packaging

EPSRC Centre for innovative manufacturing in ultra precision

Cranfield UNIVERSITY

Why are we here? And what is it all for?

	Key Possible Features – Production Machines	Nano-FIB Platform Votes	Meso Platform Votes	Roll-to-Roll Platform Votes	Total Votes
1	In-situ metrology	8	7	9	**24**
2	Structured Surfaces	3	5	1	**9**
3	Optical Surfaces	1	4	2	**7**
4	Speed x 10000	1	2	3	**6**
6	Non-contact	2	1	1	**4**
7	On-machine metrology and correction	1	1	1	**3**
8	In-situ functional test		1	2	**3**
9	100% inspection	1		2	**2**
10	Thin, flexible plastic tech			2	**2**
11	In-line process measurement		1		**1**
12	High resolution patterning of rigid and hard materials e.g. Sapphire		1		**1**
13	Frame welding			1	**1**
14	Fine laser optics		1		**1**
15	Printable smart sensors		1		**1**
16	Plastic electronics		1		**1**

EPSRC Centre for innovative manufacturing in ultra precision

Cranfield UNIVERSITY

The past...

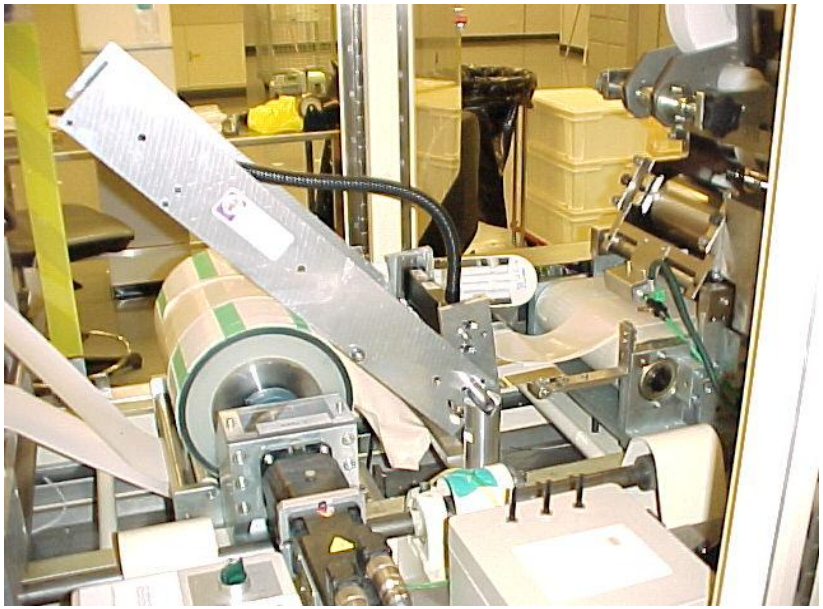

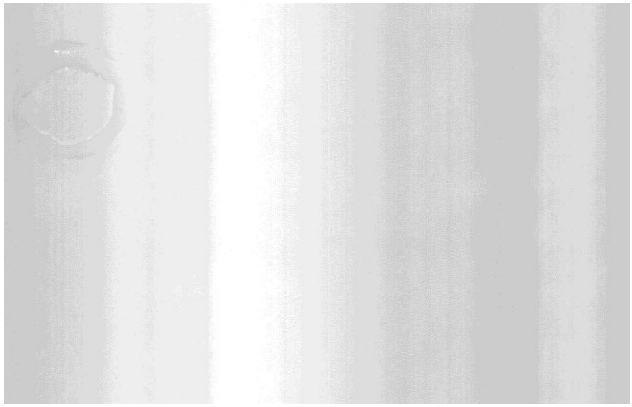

Intensity mesh plot - curved surface, manual rotation

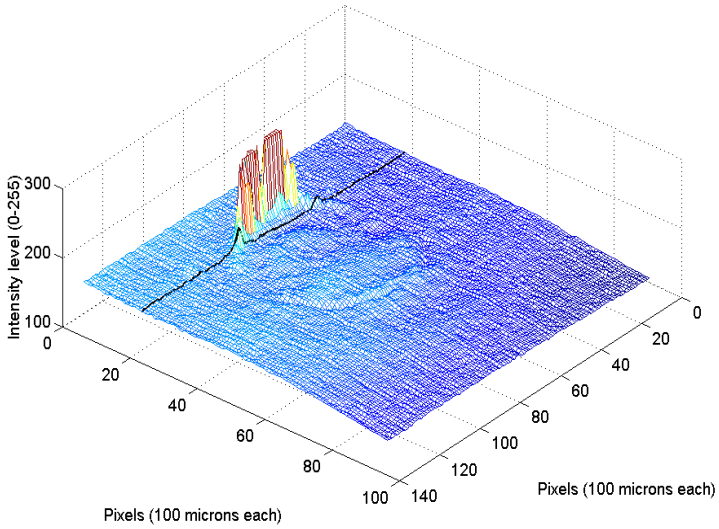

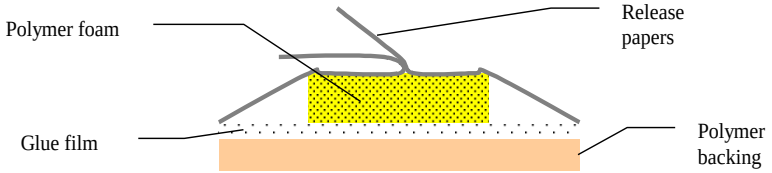

www.ultraprecision.org

EPSRC Centre for innovative manufacturing in ultra precision

Cranfield UNIVERSITY

The future?

10-00	Welcome	Paul Morantz Cranfield
10-10	Dynamically controlling the position and distortion of transparent flexible film (to microns)	Paul Morantz Cranfield
10-40	Reel to reel production of capacitive touch panels on thin flexible glass	Phil Rumsby M-Solv
11-10	BREAK	
11-30	Metrology for in process metrology for roll to roll production of flexible photo voltaics	Liam Blunt Huddersfield
12-00	Fabrication processes for flexible display backplanes, current requirements for metrology and challenges for future R2R processes	Simon Ogier CPI
12-30	LUNCH	
13-30	Precision surface for day lighting	Nick Walker iXscient
14-00	Metrology challenges for highly parallel micro-manufacture	Richard Leach NPL
14-30	Closing remarks	Richard Leach/ Paul Morantz
14-45	Optional tour	

EPSRC Centre for innovative manufacturing in ultra precision

Cranfield UNIVERSITY

R2R Platform

Related Research Projects

R2R machine and process technology studies
Precision low-cost hydrostatic bearing support
Active magnetic supported roll technology
Delicate film handling processes
Film on film alignment technologies
Precision multi film laminating processes

In-situ metrology for control of positioning & distortion

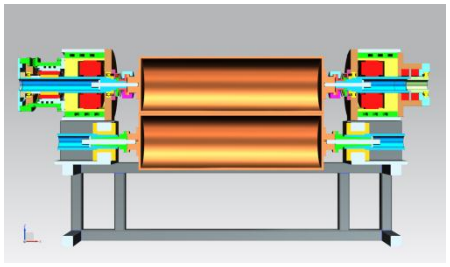
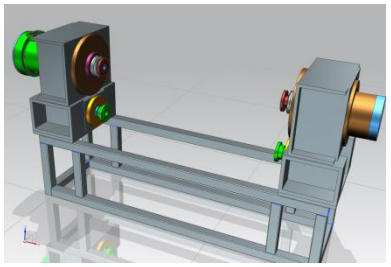
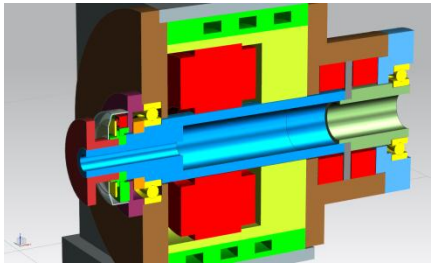
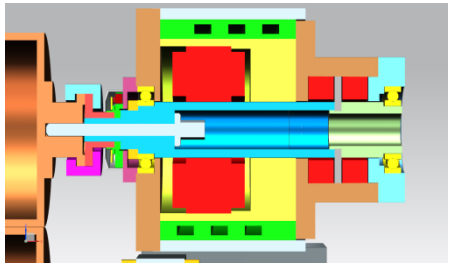

www.ultraprecision.org

EPSRC Centre for innovative manufacturing in ultra precision

Cranfield UNIVERSITY

R2R Platform

Achieve functional ability to control 2 films in lateral positioning to a sub-micron level so they can be laminated at good speed.

Work with partners to create processing stages.

1) Gravure printing station
2) Inkjet - laser processing station
3) Coatings station
4) Lamination station
5) Metrology capabilities

Status –

i) Built a low expense test rig using MSc student group project
ii) Establishing an affordable ultra precision spindle technology to develop R2R platform
iii) Created design concepts for R2R platform, established sub-systems awareness gained
iv) Procured some long lead items

EPSRC Centre for innovative manufacturing in ultra precision

Cranfield UNIVERSITY

Steerable Ultra Precision Air-Spindles

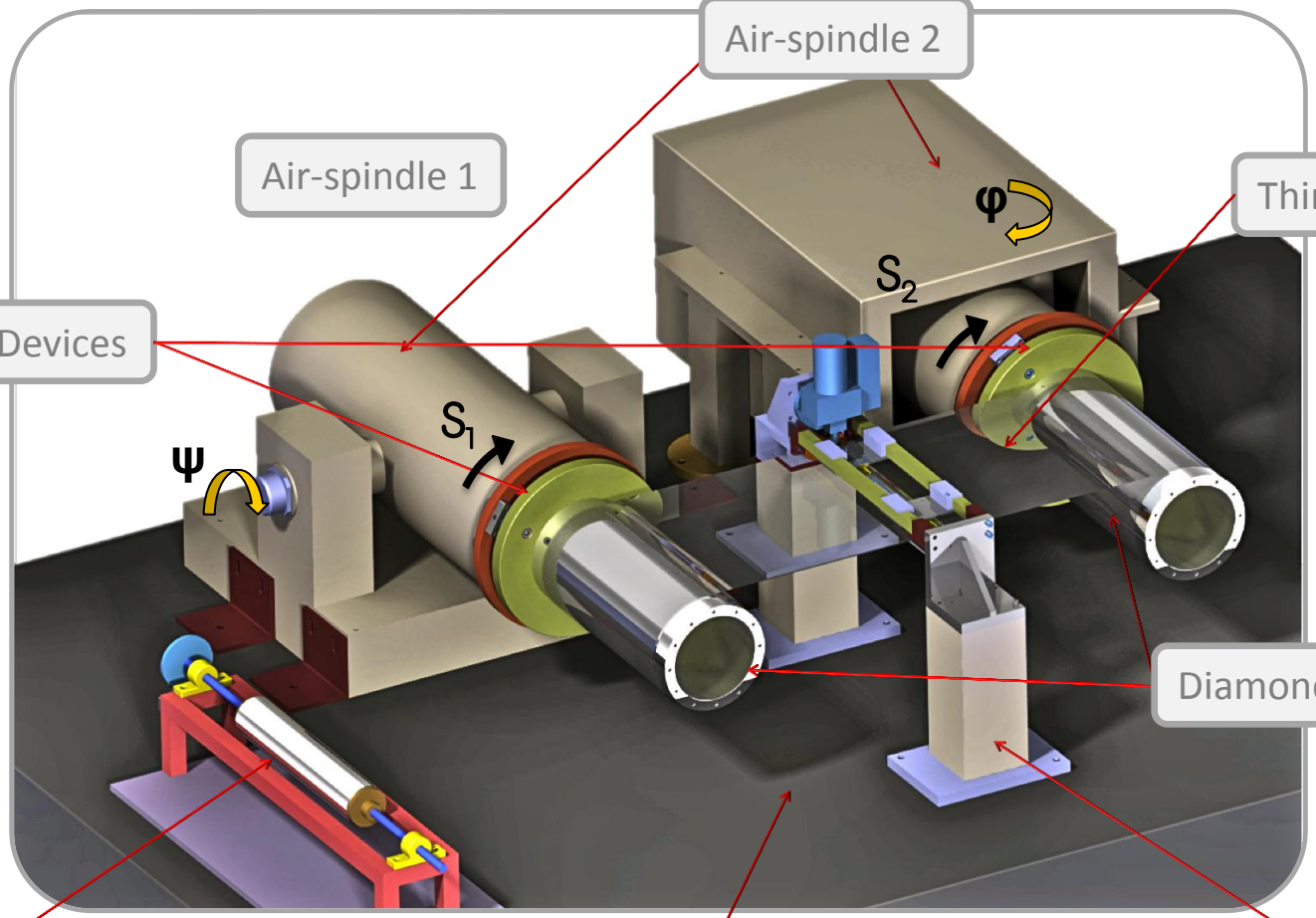

www.ultraprecision.org

EPSRC Centre for innovative manufacturing in ultra precision

Cranfield UNIVERSITY

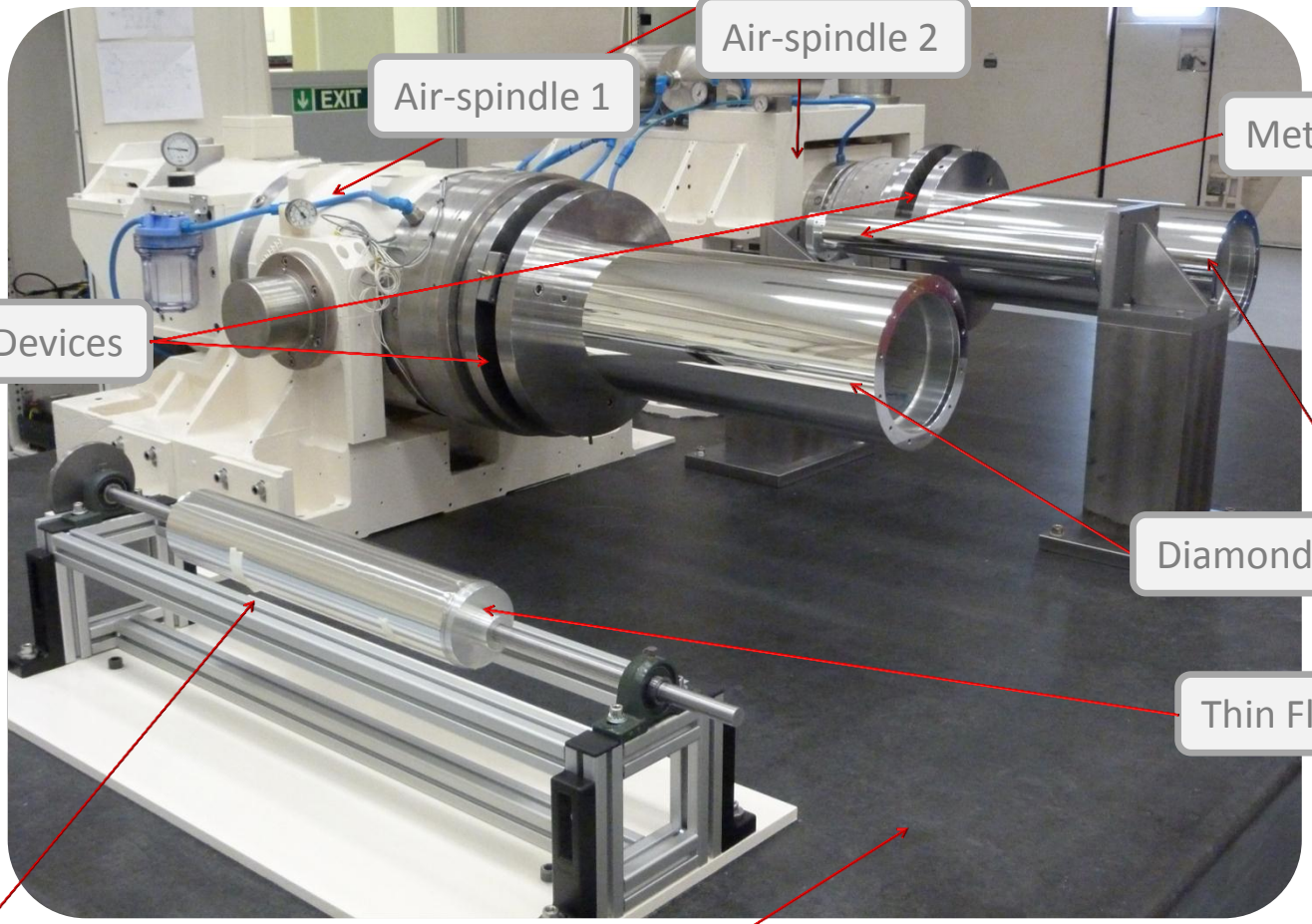

www.ultraprecision.org

EPSRC Centre for innovative manufacturing in ultra precision

Cranfield UNIVERSITY

R2R Platform

High dynamic control rotor technology for multi step micro surface texturing and feature creation

Film on film precision alignment technology, active measurement and R2R compatible adjustment

Precision and delicate multi film laminating process

In-situ metrology for large area micro structured surfaces

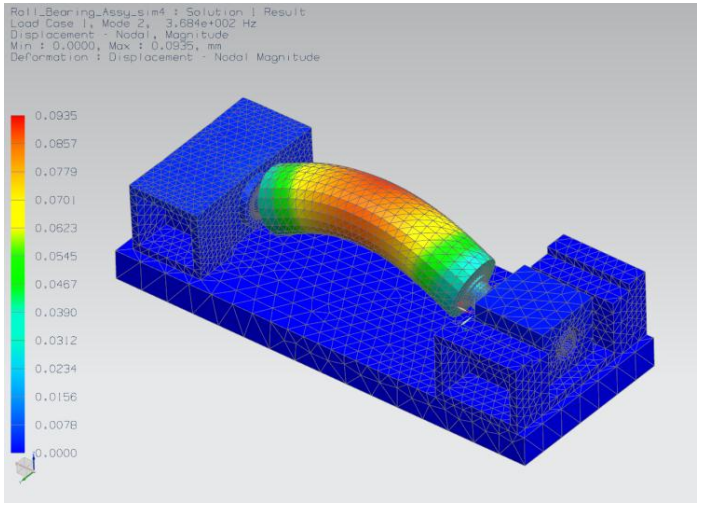

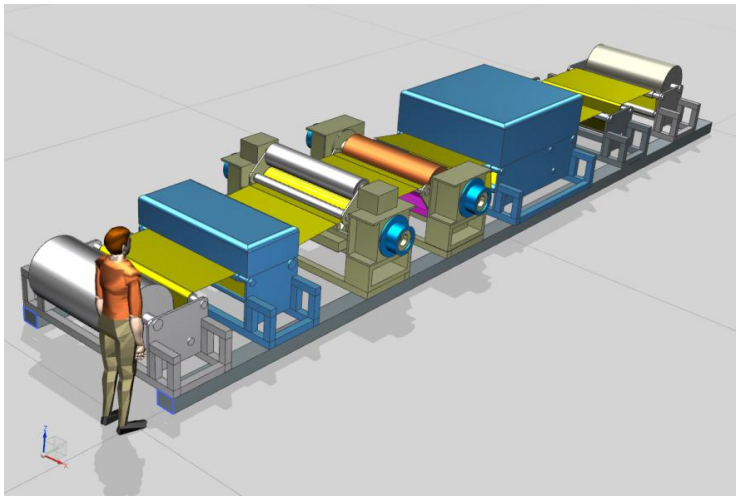

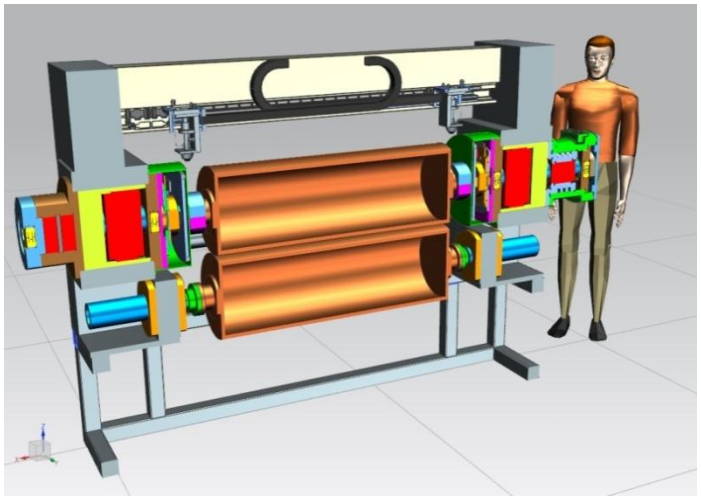

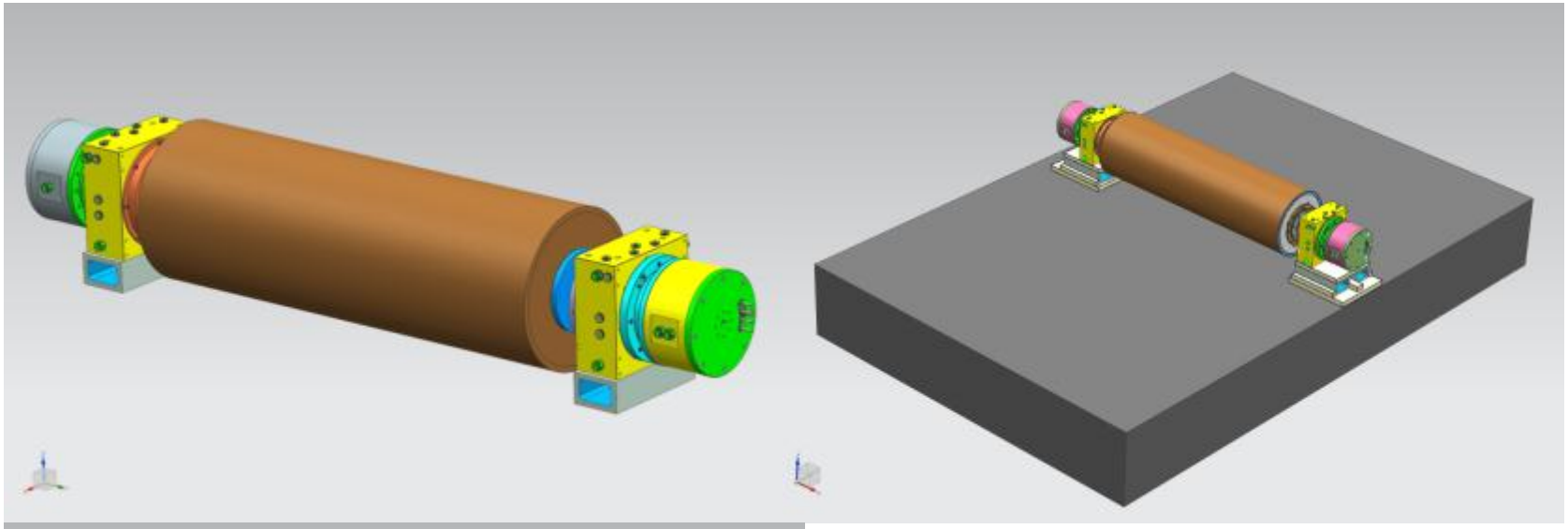

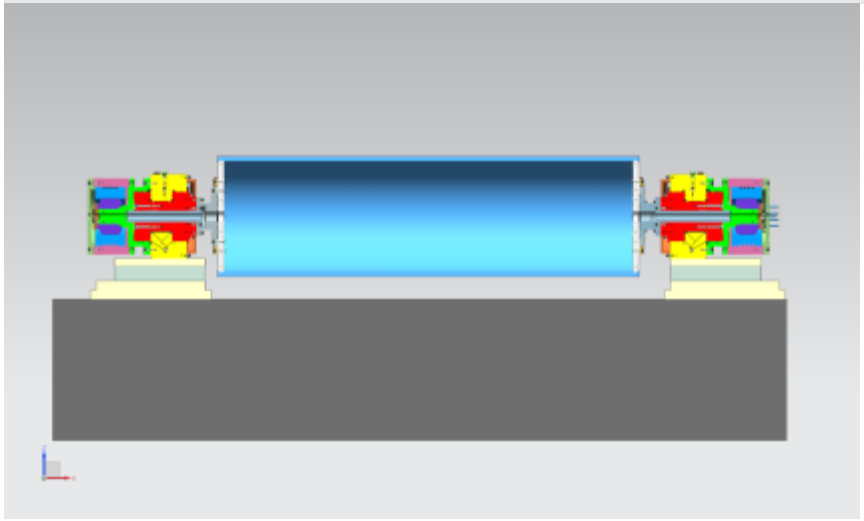

R2R Platform

Spindle system concept developed, detail design performed, manufactured parts ordered and some delivered

Test drums designed and materials ordered

Large metrology grade granite plinth delivered

EPSRC Centre for innovative manufacturing in ultra precision

Cranfield UNIVERSITY

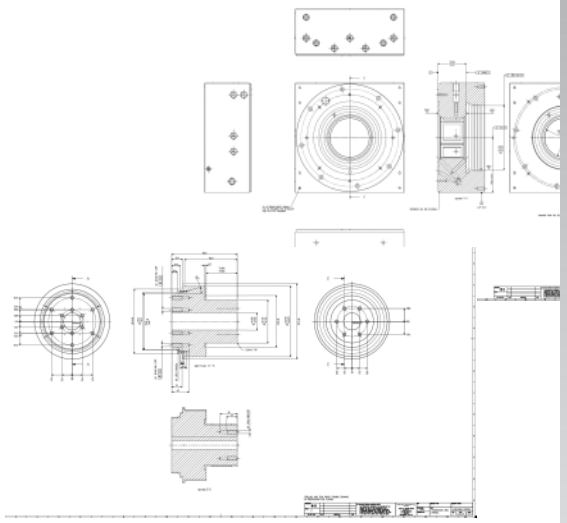

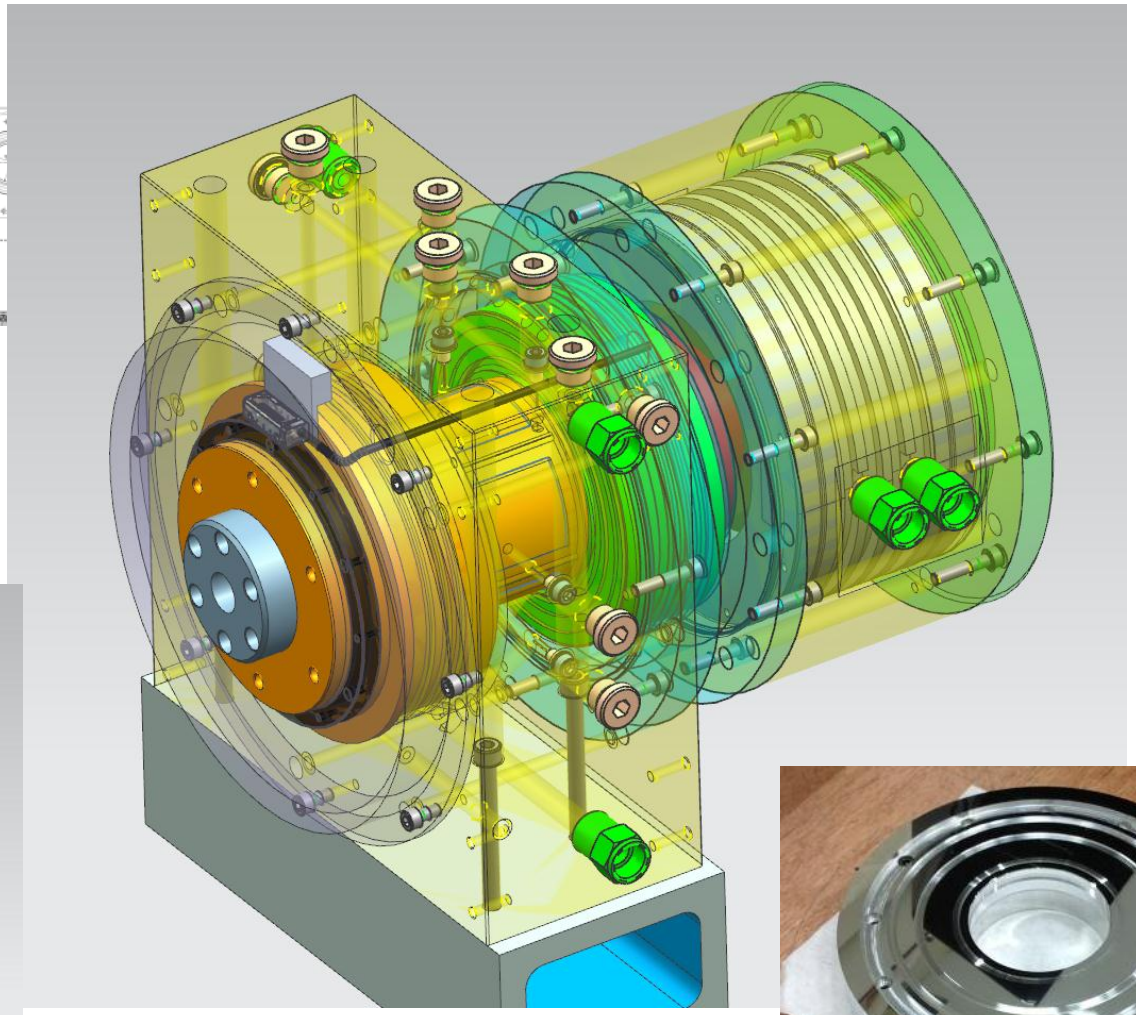

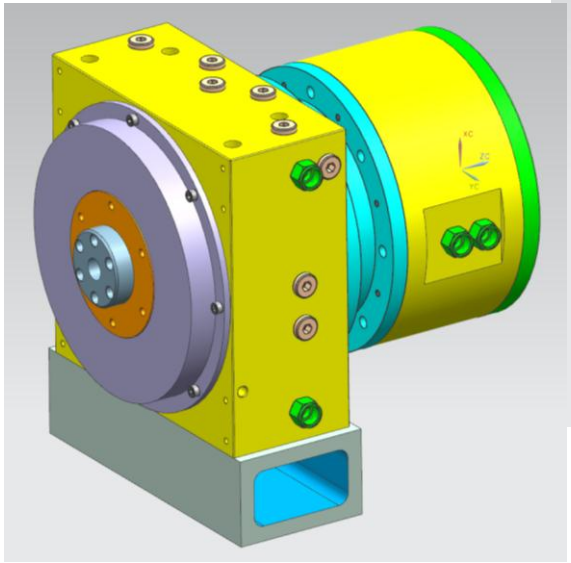

www.ultraprecision.org

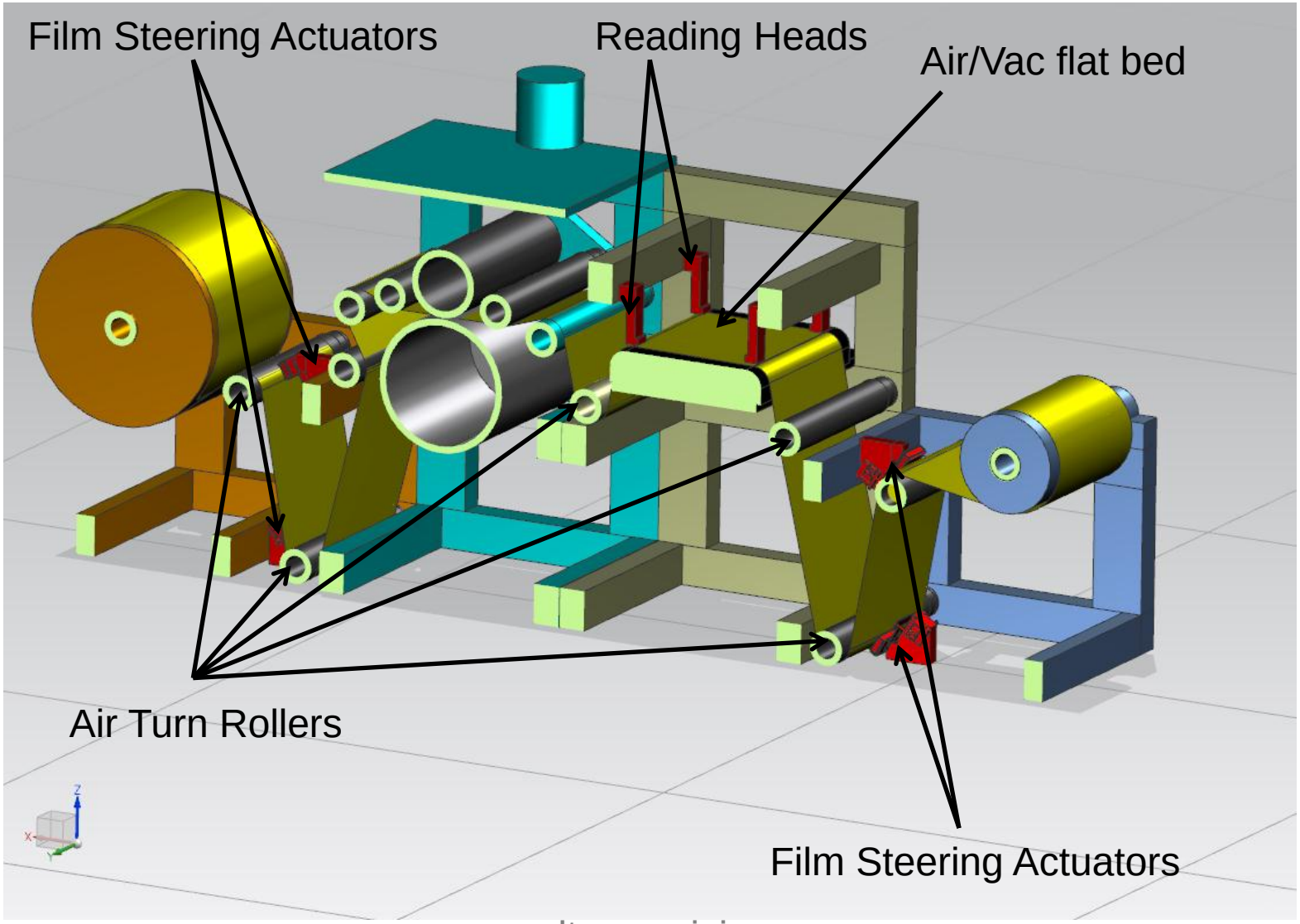
Film Steering Actuators
Reading Heads
Air/Vac flat bed
Air Turn Rollers
Film Steering Actuators

EPSRC Centre for innovative manufacturing in ultra precision

Cranfield UNIVERSITY

Metrology to support production

- Dynamic control of flexible film requires on-line metrology feedback of position in at least 2 axes in at least two positions
- Relative positioning uncertainties approaching 100nm may be required
- Film with integrated metrological gratings is suggested
- These gratings can be introduced onto/into the film using existing technology